28549-A

NAVORD OD 3000

FOURTH REVISION

LUBRICATION

OF

ORDNANCE EQUIPMENT

THIS PUBLICATION SUPERSEDES NAVORD OD 3000 THIRD REVISION
DATED 31 JANUARY 1958

PUBLISHED BY DIRECTION OF
COMMANDER, NAVAL ORDNANCE SYSTEMS COMMAND

1 NOVEMBER 1968

LIST OF EFFECTIVE PAGES

Page	Issue
Title	Original
A	Original
Foreword	Original
Blank	Original
iii thru vi	Original
1-1 thru 1-2	Original
2-1 thru 2-14	Original
3-1 thru 3-46	Original
4-1 thru 4-7	Original
4-8 blank	Original
5-1 thru 5-17	Original
5-18 blank	Original
6-1	Original
6-2 blank	Original
7-1 thru 7-2	Original
8-1 thru 8-2	Original
A-1 thru A-8	Original
I-1 thru I-4	Original

FOREWORD

1. NAVORD OD 3000, Fourth Revision, covers materials and methods used in the lubrication and hydraulic systems of naval ordnance equipment. Information is given on lubricants, preservative materials, coolants, cleaning materials, and fluids used in power transmission, buffers, recoils, counterrecoils, and damping devices.

2. This publication is intended as a general guide for personnel concerned with the use of the various materials under both normal and extreme climatic conditions, and the selection of materials to be designated on lubrication charts in accordance with NAVORD OSTD 50. Current specifications and stock numbers are included. The information contained herein supplements, but does not replace, current instructions for specific equipment. This publication does not cover conditions of exposure to nuclear radiation, nor the remedies for such conditions.

3. This publication supersedes NAVORD OD 3000, Third Revision, which should be destroyed.

4. The Naval Ordnance Systems Command invites constructive comments and criticisms from all concerned, in order to make this publication more useful. Comments should be forwarded to Commanding Officer, Naval Weapons Services Office (NAVWPNSERVO) Code SSS, Philadelphia Naval Base, Philadelphia, Pennsylvania 19112.

CONTENTS

CONTENTS (Continued)

CONTENTS (Continued)

ILLUSTRATIONS

TABLES

Chapter 1

INTRODUCTION

1.1 PURPOSE.

The purpose of OD 3000 is to serve the user as a general reference for the description, selection and application of lubricants, hydraulic fluids, coolants, and related products in the maintenance of naval ordnance. It also provides guidance for operating personnel in cleaning and preservation of equipment in active service or in standby condition.

1.2 SCOPE.

This publication covers lubricants (oil, greases and antiseize compounds), hydraulic fluids (power transmissions and recoil), cleaners, coolants, and materials used for normal operating conditions. General information is also given on lubrication equipment, hydraulic, buffer, recoil, counter-recoil, and damping systems, with related data on operation and maintenance under normal and extreme climate conditions.

1.3 APPLICATION.

1.3.1 IN DESIGN. This publication provides data useful to the designer in selecting the proper lubricants, hydraulic fluids, and other materials, in identifying them in accordance with the Federal Supply Catalog and applicable specifications, and in showing how they are related to the lubrication charts. Instructions for the use of the materials are also provided. Essential properties of the materials and the conditions and limitations under which they are used are given in the text and tables. These conditions include temperature ranges, maximum permissible loads and unfavorable operating environments. Brief descriptions of certain types of equipment are given to provide general information on the principles involved, however, the selection of new or improved types of equipment on the basis of sound engineering principles is not to be limited in any way by these descriptions. The applications of lubricants and other materials given in this publication are intended only as examples of the type of application in which the materials may be utilized.

1.3.2 IN OPERATION. Instructions for the operational maintenance of equipment are included. These instructions cover the procedures for applying lubricants and for filtering and replacing oils or hydraulic fluids. They also include procedures for performing any required tests in connection with the application of these products. The information in the publication is not intended to replace instructions furnished by the manufacturer and approved by NAVORDSYSCOM for operational maintenance of any equipment. To determine the required lubricant or other material for a particular application, refer to the applicable lubrication chart and/or instructions covering the equipment.

1.4 LIMITATIONS ON THE USE OF ALTERNATE AND SUBSTITUTE MATERIALS.

1.4.1 ALTERNATE MATERIAL. As used in this publication, the term "alternate material" refers to a material which may be used when a specified material is not available. Lubrication charts or instructions may indicate alternates and specify the conditions and limitations under which they may be used.

1.4.2 SUBSTITUTE MATERIAL. A substitute material may be used only if the specified material, or an alternate is not available. Use of substitutes should always be temporary; they must be replaced by the specified or alternate material as soon as either becomes available.

1.4.3 EMERGENCY SUBSTITUTE. Emergency substitute materials generally differ in many respects from the specified or authorized material and should be used only in an emergency. They must be replaced by specified materials or alternates as soon as either becomes available.

1.5 REFERENCED DOCUMENTS.

The following is a list of documents for additional information on the subjects covered:

Federal Test Method Standard 791 - Lubricants, Liquid Fuels and Related Products; Methods of Testing

Department of Defense Index of Specifications and Standards -

Part I, Alphabetical Listing; Part II, Numerical Listing

Military Standards MS 15000 to MS 15006 - Fittings, Lubrication (Hydraulic)

Bureau of Ships NBS431 - Lubricants, General Information, Requirements and Test Methods Relating to Qualification of Military Symbol Oils

MIL-STD-838 - Military Standard Lubrication of Military Equipment

OP 400 - General Instructions for the Design, Manufacture, and Inspection of Naval Ordnance Equipment

OP 1105 - Preservation and Preservation Maintenance of Ordnance Equipment in Shore Storage

OP 1208 - Instructions for the Inactivation, Maintenance, and Activation of Ordnance in Vessels in Inactive Status

ANA Bulletin No. 275 - Guide for Selection of Lubricants, Fluids, and Compounds for Use in Flight Vehicles and Components

Navy Stock List of General Stores:

FSC Group 68 - Chemicals and Chemical Products

FSC Group 79 - Cleaning Equipment and Supplies

FSC Group 80 - Brushes, Paints, Sealers, and Adhesives

FSC Group 91 - Fuels, Lubricants, Oils and Waxes

NAVORD OP 0 - Index of Naval Ordnance Systems Command

MIL-STD-33 - Lubrication Instructions, Preparation and Presentation of

MIL-STD-290 - Packaging, Packing, and Marking of Petroleum and Related Products

Chapter 2

SPECIFICATIONS AND STOCK NUMBERS FOR MATERIALS

2.1 SPECIFICATIONS.

Most materials used in military equipment are purchased under Federal or Military Specifications. These supersede all other types of specifications, including those formerly issued by the Army, the Navy, the Air Force, or any of their separate Corps, Bureaus, or other activities. Table 2.1 lists materials used in lubrication and hydraulic systems, including oils, greases, solid film lubricants, antiseize compounds, hydraulic fluids, coolants, antifreeze compounds, and specialty compounds.

Table 2.2 lists superseded or replaced specifications and designations for materials, with the superseding Federal and Military Specifications, to aid in locating materials referred to by their old specification numbers in publications and on equipment. Table 2.3 lists the Military and NATO symbols appearing on the Lubrication Chart.

The Department of Defense Index of Specifications and Standards lists the unclassified Federal, Military and Departmental Specifications, Standards, and related standardization documents and those Industry documents which have been coordinated for DOD use. This index provides the following specification information: preparing activity, date of latest issue, designation of custodian, activities concerned, extent of coordination, the latest revision or amendment and its date. The latest revision or amendment includes all changes made up to date of issue except in Federal Test Method Standards, for which all amendments are required. Specifications for which Qualified Products Lists are required are indicated by the symbol "Q" to the left of the specification title. Further, in the cancelled section of the index under column headed "Date," the date listed is normally the date of cancellation.

2.2 STOCK NUMBERS.

Stock numbers for many of the available specification materials referred to in this publication are listed in the Navy Stock List of General Stores, which is now part of the Federal Supply Catalog (FSC). Most of these materials are found in the following sections of the Navy Stock List:

FSC Group 68 - Chemicals and Chemical Products
FSC Group 91 - Fuels, Lubricants, Oils, and Waxes

Table 2.1 lists the current stock numbers together with the type and size of container carried in stock. Most of the current stock numbers are from the Navy Stock List of General Stores issued in accordance with the Federal Standard Catalog system.

2.3 ALTERNATE LUBRICANTS FOR MILITARY SYMBOL OILS.

The general purpose military symbol oils covered by Military Specifications MIL-L-15016 and MIL-L-15017 have been declared obsolete for use on equipment under the cognizance of the Naval Ships System Command (NAVSHIPS). NAVSHIPS has submitted higher quality, additive-containing oils for pure (uninhibitor) straight mineral oils to simplify shipboard petroleum logistic problems. Table 2.4 lists alternate oils for the military symbol oils which are still specified for use on ordnance equipment. Permission to use these alternates on ordnance equipment should be obtained from the cognizant in-service engineering activity. Initial correspondence can be directed to Naval Air Development Center (NADC), Aero Materials Department, Code MAEX, Johnsville, Pennsylvania 18974.

Table 2.1 - Lubricants, Hydraulic Fluids, Preservatives, and Cleaning Materials

TITLE	CURRENT SPECIFICATION OR DESIGNATION	CURRENT STOCK NUMBERS	CONTAINER SIZE AND TYPE
Antiseize Compounds:			
Antiseize Compound, High Temperature	MIL-A-907	8030-251-3980	1-lb can or plastic tube
		8030-286-5453	5-lb can
Antiseize Compound, White Lead Base, General Purpose (For Threaded Fittings)	TT-A-580	8030-526-2522	5-lb can
		8030-209-8005	1/2-pt can
Tape, Antiseize, Polytetrafluoroethylene, with Dispenser	MIL-T-27730	8030-889-3535	
Thread Compound, Antiseize, Graphite-Petrolatum	MIL-T-5544	8030-087-8630	1-lb can
Thread Compound, Antiseize, Zinc Dust-Petrolatum	MIL-T-22361	8030-292-1102	8-oz tube
Cleaning Compounds:			
Chromium Trioxide, Technical (Chromic Acid)	O-C-303	6810-893-7465	1-lb bottle (crystal)
		6810-174-1818	1-lb bottle (flake)
		6810-264-6517	5-lb can (flake)
		6810-264-3939	100-lb drum (flake)
Cleaning Compound, Aluminum, Non-Flame-Sustaining Type I	MIL-C-5410	6850-628-7249	1-qt can
Type II		6850-282-6770	5-gal carboy
Cleaning Compound, Solvent, for Bore of Small Arms and Automatic Aircraft Weapons	MIL-C-372	6850-224-6658	1-qt can
		6850-224-6663	1-gal can
		6850-249-8029	5-gal can
		6850-753-4806	55-gal drum
Cleaning Compound, Solvent, Grease Emulsifying Type I	P-C-444	6850-559-2837	5-gal can
		6850-559-2836	55-gal drum
Type II		6850-559-2838	1-gal can
		6850-285-6056	5-gal can
		6850-559-2835	55-gal drum
Cleaning Compound, Solvent, Grease Removal, Heavy Duty	MIL-C-20207	6850-292-9700	5-gal pail
		6850-292-9701	55-gal drum
Cleaning Compound, Water Emulsion	MIL-C-22543	7930-826-0818	5-gal can
		7930-821-3924	50-55-gal can
Corrosion Preventive Compound, Solvent Cutback, Cold Application	MIL-C-16173	8030-634-7326	1-qt can
		8030-244-1296	1-gal pail
		8030-244-1293	5-gal pail
		8030-244-1294	55-gal drum
Corrosion Preventive, Finger Print Remover	MIL-L-15074	8030-281-2338	1-gal can
		8030-252-8300	5-gal can
		8030-252-8301	55-gal drum
Dry Cleaning Solvent	P-D-680	6850-264-9038	5-gal pail
		6850-285-8012	55-gal drum
Ethyl Alcohol (For Ordnance Use) Grade 1	MIL-E-463	6810-264-6614	1-gal can
		6810-264-6615	5-gal can

Table 2.1 - Lubricants, Hydraulic Fluids, Preservatives, and Cleaning Materials (Continued)

TITLE	CURRENT SPECIFICATION OR DESIGNATION	CURRENT STOCK NUMBERS	CONTAINER SIZE AND TYPE
Cleaning Compounds: (Continued)			
Fuel Oil, Diesel, Marine	MIL-F-16884	9140-273-2377	Bulk
		9140-255-7764	5-gal can
		9140-273-2378	55-gal drum
Inhibitor, Corrosion, Liquid Cooling System	O-I-490	6850-753-4967	6-oz can
Isopropyl, Alcohol, Type A	TT-I-735	6810-286-5435	1-gal can
		6810-543-7915	55-gal drum
Kerosene	VV-K-211	9140-242-6748	Bulk
		9140-242-6749	5-gal can
		9140-242-6751	55-gal drum
Metal Conditioner and Rust Remover (Phosphoric Acid Base)	MIL-M-10578		
Type I (Wash off)		6850-270-5551	1-gal can
		6850-656-1291	5-gal plastic drum
Type II (Wipe off)		6850-174-9672	1-gal bottle
		6850-656-1292	5-gal plastic drum
Type III (Inhibited)		6850-201-1218	1-gal bottle
		6850-854-7952	5-gal plastic drum
Type V (Immersion Tank)		6850-686-1012	15-gal plastic drum
Metal Cleaner, Silicate Soap	MIL-M-7752	6850-9786	50-lb can
		6850-663-2573	400 to 450-lb drum
Remover, Paint (Alkali Type for Hot Application)	TT-R-230	8010-227-1694	400-lb drum
Remover, Paint and Varnish	MIL-R-7751	8010-169-7091	450-lb drum
		8010-238-3757	45-lb drum
Soap, Laundry Bar	P-S-591	7930-129-0801	Case (60 1-lb bars)
		7930-965-4868	Case (120 1/2-lb bars)
Sodium Carbonate, Anhydrous, Technical	O-S-571	6810-262-8567	25-lb drum
		6810-290-5400	5-lb box
Sodium Hydroxide, Technical	O-S-598	6810-174-6581	100-lb drum
		6810-270-8177	13-oz can
Sulphuric Acid, Technical	O-S-809	6810-227-1845	5-pt bottle
		6810-286-6022	200 to 750-lb drum
1,1,1-Trichloroethane, Technical	O-T-620	6810-664-0273	1-pt can
		6810-292-9625	1-qt can
		6810-664-0387	1-gal can
		6810-664-0388	5-gal can
		6810-551-1487	55-gal drum

Table 2.1 - Lubricants, Hydraulic Fluids, Preservatives, and Cleaning Materials (Continued)

TITLE	CURRENT SPECIFICATION OR DESIGNATION	CURRENT STOCK NUMBERS	CONTAINER SIZE AND TYPE
Cleaning Compounds: (Continued)			
Trichlorethylene, Technical: Type II	O-T-634		
		6810-678-4418	1-gal can
		6810-985-7217	Bulk
		6810-184-4794	5-gal drum
		6810-184-4800	55-gal drum
Coolants and Antifreeze Compounds:			
Alcohol; Ethyl Specially Denatured: Type I	MIL-A-6091	6810-250-6808	5-gal can
		6810-241-3515	55-gal drum (18 gage)
Antifreeze, Ethylene Glycol, Inhibited	O-A-548	6850-243-1992	1-gal can
		6850-224-8730	5-gal can
		6850-243-1990	55-gal drum
Anti-Icing and Deicing-Defrosting Fluid	MIL-A-8243	6810-582-4685	Bulk
Compound, Antifreeze, Arctic Type	MIL-C-11755	6810-174-1806	55-gal drum
Ethanolamines (Monoethanolamine, diethanolamine and triethanolamine), Technical Type I	MIL-E-50011	6810-270-6207	55-gal drum
Ethyl Alcohol (Ethanol); Denatured Alcohol Grade I	O-E-760	6810-865-2914	5-gal can
		6810-865-2915	55-gal drum
Grade III		6810-543-7415	1-gal can
		6810-201-0907	5-gal can
		6810-201-0904	55-gal drum
Damping Fluid:			
Fluid, Damping, Ester Base, Class A	MIL-F-16929	9150-531-6968	1-qt can
		9150-531-6969	5-gal can
		9150-543-7709	1-pt bottle
Damping Fluid, Silicone Base (Dimethyl Polysiloxane) Viscosity Grades in Centistokes at 77°F	VV-D-001078		
0.65[1]		9150-550-7000	3/4-lb can
2.0[1]		9150-754-2600	3/4-lb can
10.0		9150-607-0897	1-pt can
20.0		9150-543-7219	1-pt can
50.0		9150-664-0047	1-pt can
100		9150-269-8246	1-pt can
200		9150-584-3134	1-pt can
500		9150-024-9621	1-pt can
1,000[1]		9150-721-9557	1-pt can
5,000		9150-664-3829	1-pt can
7,500		9150-292-9608	1-pt can
12,500		9150-024-9624	1-pt can
20,000[1]		9150-257-5434	1-pt can

Table 2.1 - Lubricants, Hydraulic Fluids, Preservatives, and Cleaning Materials (Continued)

TITLE	CURRENT SPECIFICATION OR DESIGNATION	CURRENT STOCK NUMBERS	CONTAINER SIZE AND TYPE
Damping Fluid: (Continued)			
40,000[1]		9150-864-4973	1-pt can
60,000		9150-261-8326	1-gal can
100,000[1]		9150-292-9609	1-pt can
200,000[1]		9150-286-8088	1-pt can
Greases:			
Grease, Aircraft, General Purpose	MIL-G-7711[2]	9150-257-5361	1-lb can
		9150-190-0893	5-lb can
		9150-269-8374	35-lb can
Grease, Aircraft, Fuel and Oil Resistant	MIL-G-27617	9150-961-8995	8-oz tube
Grease, Aircraft, General Purpose, Wide Temperature Range	MIL-G-81322	9150-944-8953	1-lb can
		9150-935-5851	35-lb can
Grease, Aircraft and Instrument, Gear and Actuator Screw	MIL-G-23827	9150-985-7243	1-oz tube
		9150-985-7245	8-oz tube
		9150-985-7246	1-lb can
		9150-985-7247	5-lb can
		9150-985-7248	35-lb pail
Grease, Automotive and Artillery	MIL-G-10924	9150-190-0904	1-lb can
		9150-190-0907	35-lb pail
		9150-530-7369	120-lb drum
Grease, Ball and Roller Bearing	MIL-G-18709	9150-526-4205	1-lb can
		9150-663-9795	5-lb can
Grease, Ball and Roller Bearing	MIL-G-25013	9150-141-6770	1-lb can
		9150-985-7316	1-lb can
Grease, General Purpose	MIL-G-23549	9150-823-8047	35-lb pail
		9150-985-7316	1-lb can
Grease, Molybdenum Disulfide	MIL-G-21164	9150-754-2595	1-lb can
Grease, Pneumatic System	MIL-G-4343	9150-269-8255	1-lb can
Grease, Plug Valve Type I	MIL-G-6032	9150-190-0926	8-oz can
		9150-257-5360	1-lb can
Grease, Wire Rope - Exposed Gear	MIL-G-18458	9150-530-6814	35-lb pail
		9150-530-6813	120-lb drum
Lubricating Grease (high temperature, electric motor, ball and roller bearings)	MIL-L-15719	9150-257-5358	8-oz tube
Petrolatum, Technical	VV-P-236	9150-250-0933	5-lb can
Lubricant, Wire Rope	MIL-L-22803		
Hydraulic Fluid:			
Fluid, Power Transmission	MIL-F-17111	9150-290-4091	1/2-pt can
		9150-261-8317	5-gal drum
		9150-261-8318	55-gal drum
Hydraulic Fluid, Petroleum Base, Aircraft Missile, and Ordnance	MIL-H-5606	9150-252-6383	1-qt can
		9150-223-4134	1-gal can
Hydraulic Fluid, Petroleum Base, Artillery Recoil, Special	MIL-H-13866	9150-252-6374	1-gal can

Table 2.1 - Lubricants, Hydraulic Fluids, Preservatives, and Cleaning Materials (Continued)

TITLE	CURRENT SPECIFICATION OR DESIGNATION	CURRENT STOCK NUMBERS	CONTAINER SIZE AND TYPE
Hydraulic Fluid: (Continued)			
Hydraulic Fluid, Petroleum Base, Ultra Low Temperature	MIL-H-81019	9150-935-7148	1-gal can
Lubricating Oils:			
Caster Oil, Technical Grade 1	JJJ-C-86	9150-270-0047	1-gal can
Graphite Colloidal (In Polyalkyene Glycol)	MIL-G-17745[3]		
Graphite, Colloidal Lubricant, Pressure Spray Applied	MIL-G-26548	9150-282-7407	Spray dispenser can (12 oz)
Insulating Oil, Electrical (for Transformers, Switches, and Circuit Breakers)	VV-I-530	9160-685-0912	1-qt can
		9160-611-2000	1-gal can
		9160-685-0913	5-gal can
Lubricating Oil Grade A	MIL-L-19224 (NORD)	9150-027-4551	1-qt can
Mineral, Preservative Grade B		9150-817-2585	1-qt can
Minus 30°F Pour Grade C		9150-027-4552	1-qt can
Lubricating Oil, Aircraft Instrument, Low Volatility	MIL-L-6085	9150-664-6518	1-1/2-oz bottle
		9150-223-4129	1-qt can
Lubricating Oil, Aircraft Piston Engine	MIL-L-22851		
Type II		9150-753-5060	5-gal pail
Type III		9150-965-2302	Bulk pkg A/A
		9150-965-2303	5-gal pail
		9150-965-2305	55-gal drum
Lubricating Oil, Aircraft Reciprocating Engine (Piston) Grade 1065	MIL-L-6082	9150-255-3929	5-gal drum
		9150-231-6669	55-gal drum (18 gage)
Lubricating Oil, Aircraft Turbine Engine, Petroleum: Oxidation Resistant	MIL-O-6081	9150-273-8810	1-qt can
		9150-273-8811	1-gal can
		9150-273-8808	55-gal drum
Lubricating Oil, Steam Turbine (Noncorrosive) 2190-TEP	MIL-L-17331	9150-235-9061	5-gal can
		9150-235-9062	55-gal drum
		9150-235-9064	Bulk pkg A/A
Lubricant, All-Weather, Semi-Fluid for Aircraft Ordnance	MIL-L-19701	9150-559-3071	1-lb can
Lubricating Oil, Breechblock (For Naval Ordnance,	MIL-L-16785		
Summer Grade A,		9150-231-6661	1-qt can
Winter Grade B)		9150-231-6662	1-qt can
Lubricant, Colloidal Graphite in Oil, Light, Grade A	MIL-L-3572	9150-261-7905	2-oz bottle
		9150-235-5581	1-gal can
Medium, Grade B		9150-261-7906	2-oz bottle
		9150-235-5584	1-gal can
		9150-235-5585	5-gal pail
Heavy, Grade C		9150-235-5587	1-gal can

Table 2.1 - Lubricants, Hydraulic Fluids, Preservatives, and Cleaning Materials (Continued)

TITLE	CURRENT SPECIFICATION OR DESIGNATION	CURRENT STOCK NUMBERS	CONTAINER SIZE AND TYPE
Lubricating Oils: (Continued)			
Lubricating Oil, Chain, Wire Rope, Exposed Gear Type II, Protective:	VV-L-751		
For Cold Weather, Grade A		9150-234-5197	5-lb can
		9150-261-7891	35-lb pail
		9150-530-7293	120-lb drum
For Warm Weather, Grade B		9150-246-3276	35-lb pail
		9150-231-9049	100-lb drum
		9150-530-7371	120-lb drum
For Hot Weather, Grade C		9150-264-2918	35-lb can
		9150-530-7370	120-lb drum
Lubricating Oil, Gear Petroleum Base, Grade L (Light)	MIL-L-6086	9150-265-9417	1-gal can
Grade M (Medium)		9150-240-2235	1-pt can
		9150-223-4130	1-gal can
Lubricating Oil, General Purpose MS 2110	MIL-L-15016[4]	9150-223-4137	5-gal drum
		9150-235-5577	55-gal drum
MS 2135		9150-231-6664	5-gal drum
		9150-231-6665	55-gal drum
MS 2190		9150-231-6639	5-gal drum
		9150-231-6640	55-gal drum
MS 3050		9150-235-9074	1-pt can
		9150-235-9069	1-qt can
		9150-223-4138	5-gal drum
		9150-235-9071	55-gal drum
Lubricating Oil, General Purpose	MIL-L-3150	9150-271-8427	4-oz can
		9150-231-2361	1-qt can
		9150-231-2356	5-gal can
Lubricating Oil, General Purpose, Preservative (Water Displacing, Low Temperature)	VV-L-800	9150-273-2389	4-oz can
		9150-231-6689	1-qt can
		9150-231-9062	5-gal can
		9150-281-2060	55-gal drum (18 gage)
Lubricating Oil, Hydraulic and Light Turbine, Non-Corrosive MS 2075 TH	MIL-L-17672	9150-985-7230	1-pt can
		9150-985-7231	1-qt can
		9150-985-7232	5-gal pail
		9150-985-7233	55-gal drum
MS 2110 TH		9150-582-5481	Bulk
		9150-753-4799	1-gal can
		9150-985-7234	5-gal pail
		9150-582-5480	55-gal drum
MS 2135 TH		9150-584-2561	Bulk
		9150-985-7236	1-qt can
		9150-985-7237	5-gal pail
		9150-584-2560	55-gal drum

Table 2.1 - Lubricants, Hydraulic Fluids, Preservatives, and Cleaning Materials (Continued)

TITLE	CURRENT SPECIFICATION OR DESIGNATION	CURRENT STOCK NUMBERS	CONTAINER SIZE AND TYPE
Lubricating Oils: (Continued)			
Lubricating Oil Instrument, Jewel Bearing, Non-Spreading, Low Temperature	MIL-L-3918	9150-270-0063	1/2-oz bottle
Lubricating Oil, Internal Combustion Engine, Diesel	MIL-L-9000		
(9110)		9150-231-9040	Bulk
		9150-231-9037	5-gal pail
		9150-231-9038	55-gal drum (18 gage)
(9170)		9150-231-6652	Bulk
		9150-231-6649	5-gal pail
		9150-231-6650	55-gal drum (18 gage)
Lubricating Oil, Mineral Cylinder	MIL-L-15018		
MS 5190		9150-240-2260	5-gal drum
		9150-240-2261	55-gal drum (18 gage)
MS 5230		9150-243-3192	5-gal drum
		9150-243-3193	55-gal drum (18 gage)
Lubricating Oil, Mineral Oil Composition (For Torpedo Gyroscope)	MIL-L-16958	9150-235-5589	2-oz bottle
		9150-235-5590	8-oz bottle
Lubricating Oil, Molybdenum Disulfide, Silicone Base, High Temperature	MIL-L-25681	9150-543-7220	1-lb can
Lubricating Oil, Preservative, Light	MIL-L-3503	9150-231-9063	4-oz can
		9150-231-9064	1-qt can
		9150-231-9066	5-gal can
Lubricating Oil, Synthetic (For Mechanical Time Fuses)	MIL-L-11734[3]	9150-715-5951	2-oz bottle
Lubricating Oil, Worm Gear	MIL-L-18486	9150-235-5591	1-gal can
		9150-235-5592	5-gal drum
Non-Lubricating Preservatives:			
Compound, Gun Slushing	MIL-C-18487	8030-272-8530	35-lb pail
		8030-264-2063	400-lb drum
Corrosion Preventive, Petrolatum, Hot Application Class C (Soft Film)	MIL-C-11796	8030-285-1570	35-lb pail
Corrosion Preventive, Solvent Cut-Back (Cold Application)	MIL-C-16173		
Grade 1		8030-231-2345	1-gal can
		8030-244-1299	5-gal pail
		8030-244-1300	55-gal drum
Grade 1A		8030-272-8531	5-gal pail
Grade 2		8030-244-1297	1-gal can
		8030-244-1298	5-gal pail
		8030-244-1295	55-gal drum

Table 2.1 - Lubricants, Hydraulic Fluids, Preservatives, and Cleaning Materials (Continued)

TITLE	CURRENT SPECIFICATION OR DESIGNATION	CURRENT STOCK NUMBERS	CONTAINER SIZE AND TYPE
Non-Lubricating Preservatives: (Continued)			
Grade 3		8030-634-7326	1-qt can
		8030-244-1296	1-gal can
		8030-244-1293	5-gal can
		8030-244-1294	55-gal drum
Neat's-Foot Oil	C-N-200	8030-244-1031	1-qt can
		8030-244-1033	1-gal can
Preservative Coating, Canvas	MIL-P-15159		
Deck Gray		8030-281-2347	1-gal can
		8030-550-5906	5-gal pail
Haze Gray		8030-550-5906	5-gal pail
		8030-550-5905	1-gal can
White		8030-550-8017	1-gal can
		8030-285-6543	5-gal pail
Sodium Chromate, Anhydrous Technical	O-S-588	6810-240-2119	1-lb bottle
		6810-264-6714	100-lb drum

[1] Not Navy stock item but can be made available if a valid volume requirement exists.
[2] It is anticipated MIL-G-81322 will supersede this specification in the near future.
[3] Local purchase due to low volume requirements.
[4] No longer standard Navy stock item - see table 2.4 for designation of alternative.

Table 2.2 - Superseded, Cancelled, and Replaced Specifications

ORIGINAL NUMBER	INTERVENING NAVY NUMBER	INTERVENING NUMBER	CURRENT SPECIFICATIONS
BuOrd (NAVY ORD OS)			
627	14C8 (Ord)	MIL-C-18487 (NOrd)	MIL-C-18487 (NOrd)
646	14G10	MIL-G-16908 (BuOrd)	MIL-G-7711
758	14G10	MIL-G-16908 (BuOrd)	MIL-G-7711
812	14T2 (Ord)	MIL-T-3123	Cancelled
814	14L15 (Ord)	MIL-L-16958	MIL-L-16958
856	--	MIL-L-6082	MIL-L-6082
1015	--	51F23 (Ord)	MIL-F-17111
1023	14-0-12	VV-O-401	VV-I-530
1113	--	51F23 (Ord)	MIL-F-17111
1165	14L14 (Ord)	MIL-L-16785	MIL-L-16785
1166	14C9 (Ord)	MIL-C-16173, Grade 1A	MIL-C-16173, Grade 1A
1209	14L13 (Ord)	MIL-L-3572, Grade 1A	MIL-L-3572, Grade A
1324	--	MIL-G-18694 (NOrd)	MIL-G-18694
1350	14G10	MIL-G-16908 (BuOrd)	MIL-G-7711
1361	--	MIL-L-644	VV-L-800
1362	14L17 (Ord)	MIL-L-3503	MIL-L-3503
1384	14L13 (Ord)	MIL-L-3572	MIL-L-3572, Grade C

Table 2.2 - Superseded, Cancelled, and Replaced Specifications (Continued)

ORIGINAL NUMBER	INTERVENING NAVY NUMBER	INTERVENING NUMBER	CURRENT SPECIFICATIONS
BuOrd (NAVY ORD OS)(Cont'd)			
1385	14G9 (Ord)	MIL-G-17440 (NAVY)	MIL-G-23549
1400	--	MIL-L-18486 (NAVY)	MIL-L-18486
1426	51C29	JAN-C-372	MIL-C-372
1647	14-O-20 (Ord)	MIL-L-6085	MIL-L-6085
1648	14G8 (Ord)	MIL-G-15793	MIL-G-23827
1662	14G9 (Ord)	MIL-G-17740 (NAVY)	MIL-G-23549
1914	--	MIL-C-18694 (NOrd)	MIL-G-18694
2533	14L7	MIL-G-3545	MIL-G-81322
2943	51F21 (Ord)	MIL-F-17111 (NOrd)	MIL-F-17111 (NOrd)
NAVY			
7-O-2	--	--	MIL-F-16884
14C8 (Ord)	--	--	MIL-C-18487 (NOrd)
14C9 (Ord)	--	--	MIL-C-16173, Grade 1A
	--	--	MIL-G-10924
14G5 (INT)	--	--	SG-G-659
14G8 (Ord)	--	MIL-G-15793	MIL-G-23827
14G9 (Ord)	--	MIL-G-17740 (NAVY)	MIL-G-23549
14G10	--	MIL-G-16908 (BuOrd)	MIL-G-7711
14G11	--	MIL-G-3278	MIL-G-23827
14L3	--	--	MIL-G-18709 (NAVY)
	--	--	MIL-G-10924
14L7	--	MIL-G-3545	MIL-G-81322
	--	--	MIL-G-10924
14L13 (Ord)	--	--	MIL-L-3572
Grade A			Grade A
Grade B			Grade B
Grade C			Grade C
14L14 (Ord)	--	--	MIL-L-16785
14L15 (Ord)	--	--	MIL-L-16958
14L16 (Aer)	--	--	MIL-L-3918
14L17 (Ord)	--	--	MIL-L-3503
14-O-6	--	--	JJJ-C-86
14-O-12	--	VV-O-401	VV-I-530
14-O-17 (INT)	--	--	MIL-L-3150
14-O-20 (Ord)	--	--	MIL-L-6085
14P1	--	--	VV-P-236
14T2 (Ord)	--	MIL-T-3123	Cancelled
51A2	--	O-S-801	O-S-809
51A13	--	MIL-A-463	MIL-E-463
51C39	--	O-E-71	O-A-548
51C59	--	JAN-C-372	MIL-C-372
51C65 (Ships)	--	--	MIL-C-20207
51F21 (Ord)	--	--	MIL-F-17111
51F23 (Ord)	--	--	MIL-F-17111
51F24 (Ord)	--	--	MIL-F-16929
52C18	--	--	MIL-C-16173
Grade 1			Grade 1
Grade 2			Grade 2
Grade 3			Grade 3
52C19	--	--	MIL-A-907 (NAVY)
NS 1042	--	MIL-L-15016	MIL-L-17672
		MS 3042	MS 2075 TH

Table 2.2 - Superseded, Cancelled, and Replaced Specifications (Continued)

ORIGINAL NUMBER	INTERVENING NAVY NUMBER	INTERVENING NUMBER	CURRENT SPECIFICATIONS
NAVY (Continued)			
NS 1047	--	MIL-L-15016 MS 3050	MIL-L-17672 MS 2135 TH
NS 1065	--	MIL-L-6082 Grade 1065	MIL-L-22851 Type III
NS 1100	--	MIL-L-6082 Grade 1100	MIL-L-22851 Type II
NS 2075	--	MIL-L-15016 MS 2075	MIL-L-17672 MS 2075 TH
NS 2110	--	MIL-L-15016 MS 2110	MIL-L-17672 MS 2075 TH
NS 2135	--	MIL-L-15016 MS 2135	MIL-L-17672 MS 2135 TH
NS 3042	--	MIL-L-15016 MS 3042	MIL-L-17672 MS 2075 TH
NS 3050	--	MIL-L-15016 MS 3050	MIL-L-17672 MS 2135 TH
NS 3065	--	MIL-L-15016 MS 3065	MIL-L-22851 Type III
NS 3080	--	MIL-L-15016 MS 3080	MIL-L-22851 Type III
NS 3100	--	MIL-L-15016 MS 3100	MIL-L-22851 Type II
NS 3120	--	MIL-L-15016 MS 3120	MIL-L-22851 Type II
NS 3150	--	MIL-L-15016 MS 3150	MIL-L-22851 Type II
NS 5190	--	MIL-L-15018 MS 5190	MIL-L-15018 MS 5190
BuAer			
C-109b	--	MIL-N-7752	MIL-M-7752
FEDERAL			
C-O-388	--	C-N-200	C-N-200
O-A-111	--	O-S-801	O-S-809
P-C-576	--	--	P-C-444
P-S-600	--	--	P-S-591
P-S-631	--	--	O-S-598
P-S-661	--	--	P-D-680
TT-Z-291	--	TT-P-460	MIL-T-22361
MILITARY			
JAN-C-490	--	MIL-C-490	Cancelled
JAN-A-669	--	--	TT-A-580
MIL-C-878 (Ships)	--	O-E-771	O-A-548
MIL-C-972 (Ships)	--	MIL-C-16173	MIL-C-16173
Grade 1		Grade 1	Grade 1
Grade 2		Grade 2	Grade 2
Grade 3		Grade 3	Grade 2
MIL-T-5542	--	--	MIL-T-27730
MIL-S-6892	--	--	TT-R-230
MIL-G-15017	--	--	MIL-L-17672
MIL-G-16908	--	--	MIL-G-7711
MIL-L-17353	--	--	MIL-L-19701

Table 2.2 - Superseded, Cancelled, and Replaced Specifications (Continued)

ORIGINAL NUMBER	INTERVENING NAVY NUMBER	INTERVENING NUMBER	CURRENT SPECIFICATIONS
MILITARY (Cont'd)			
MIL-L-17554	--	--	Cancelled
ARMY			
2-36	--	MIL-H-13866 (Ord)	MIL-H-13866 (MR)
2-47	--	MIL-L-3918	MIL-L-3918
2-77	--	MIL-H-13862 (Ord)	MIL-H-5606
2-82	--	MIL-C-11796	MIL-C-11796
2-84	--	MIL-C-11796	MIL-C-11796
2-117	--	JAN-C-372	MIL-C-372
2-121	--	MIL-C-11796	MIL-C-11796
2-122	--	MIL-L-3150	MIL-L-3150
3-213	--	MIL-M-10578	MIL-M-10578
AIR FORCE - NAVY AERONAUTICAL			
AN-A-21	--	O-C-303	O-C-303
AN-C-53	--	JAN-A-669	TT-A-580
AN-C-124, Type I	--	MIL-C-16173, Grade 2	MIL-C-16173, Grade 2
AN-G-5	--	MIL-G-3545	MIL-G-81322
AN-G-25	--	MIL-G-3278	MIL-G-23827
AN-O-3	--	MIL-L-6086	MIL-L-6086
AN-O-6	--	MIL-L-7870	MIL-L-7870
AN-O-8	--	MIL-L-6082	MIL-L-6082
AN-O-11	--	MIL-L-6085	MIL-L-6085
AN-O-366	--	MIL-O-5606	MIL-H-5606

Table 2.3 - Military and NATO Symbols Appearing on Lubrication Charts

SPECIFICATION NUMBER	SPECIFICATION NOMENCLATURE	MILITARY SYMBOL	NATO SYMBOL
VV-I-530	Insulating Oil, Electrical (For Transformers, Switches and Circuit Breakers)	OT	
VV-L-751	Lubricating Oil: Chain, Wire Rope, Exposed Gear, Type 1 Regular:		
	Grade A	CW-1A	0-199
	Grade B	CW-1B	
	Grade C	CW-1C	0-203
VV-L-800	Lubricating Oil, General Purpose Preservative (Water Displacing, Low Temperature)		0-190
MIL-L-3150	Lubricating Oil, Preservative, Medium	PL-M	0-192
MIL-L-3503	Lubricating Oil, Preservative, Light	PL-L	
MIL-L-3572	Lubricant Colloidal Graphite in Oil	LGG	
MIL-L-3918	Lubricating Oil, Instrument, Jewel, Bearing Nonspreading, Low Temperature	OCW	0-229
MIL-L-6081	Lubricating Oil, Jet Engine		
	Grade 1005	1005	0-132
	Grade 1010	1010	0-133

Table 2.3 - Military and NATO Symbols Appearing on Lubrication Charts (Continued)

SPECIFICATION NUMBER	SPECIFICATION NOMENCLATURE	MILITARY SYMBOL	NATO SYMBOL
MIL-L-6082	Lubricating Oil, Aircraft Reciprocating Engine (Piston)		
	Grade 1065	1065	0-113
	Grade 1100	1100	0-117
MIL-L-6085	Lubricating Oil, Instrument Aircraft, Low Volatility	OAI	0-147
MIL-L-6086	Lubricating Oil, Gear, Petroleum Base:		
	Grade L		0-153
	Grade M	OGR	0-155
MIL-L-7808	Lubricating Oil, Aircraft Turbine Engine, Synthetic Base	LGT	0-148
MIL-A-6091	Alcohol; Ethyl, Specially Denatured		S-738
MIL-L-7870	Lubricating Oil, General Purpose	OGP	0-142
MIL-L-9000	Lubricating Oil, Internal Combustion Engine, Diesel:		
	MS 9110	9110	0-272
	MS 9170	9170	0-273
	MS 9250	9250	0-274
	MS 9500	9500	0-276
MIL-L-10324	Lubricating Oil, Gear, Sub Zero	GOS	0-188
MIL-L-11734	Lubricating Oil, Synthetic (For Mechanical Time Fuzes)		
MIL-L-15016	Lubricating Oil, General Purpose:		
	MS 2110	2110	
	MS 2135	2135	
	MS 2190	2190	
	MS 3050	3050	
MIL-L-15018	Lubricating Oil, Mineral Cylinder:		
	MS 5150	5150	0-252
	MS 5190	5190	0-258
	MS 5230	5230	
MIL-H-5606	Hydraulic Fluid, Petroleum Base; Aircraft and Ordnance	OHA	H-515
MIL-F-16929	Fluid, Damping, Ester Base:		
	Class A	FDE-A	
	Class B	FDE-B	
	Class C	FDE-C	
	Class D	FDE-D	
	Class E	FDE-E	
	Class F	FDE-F	
MIL-F-17111	Fluid, Power Transmission		H-575
MIL-L-17331	Lubricating Oil, Steam Turbine (Noncorrosive)	2190 TEP	0-250
MIL-L-17672	Lubricating Oil, Hydraulic and Light Turbine		H-575
	MS 2075 TH	2075 TH	
	MS 2110 TH	2110 TH	H-573
	MS 2135 TH	2135 TH	
MIL-H-22072	Hydraulic Fluid, Catapult	HFC	
MIL-L-22851	Lubricating Oil, Aircraft Piston Engine (Ashless Dispersant)		
	Type II	LAD II	0-128
	Type III	LAD III	0-123

Table 2.3 - Military and NATO Symbols Appearing on Lubrication Charts (Continued)

SPECIFICATION NUMBER	SPECIFICATION NOMENCLATURE	MILITARY SYMBOL	NATO SYMBOL
MIL-L-23699	Lubricating Oil, Aircraft Turbine Engines, Synthetic Base		0-156
MIL-G-4343	Grease, Pneumatic System	--	G-392
MIL-G-6032	Grease, Plug Valve, Gasoline and Oil Resistant		
	Type I	GRG	G-363
MIL-G-7711	Grease, Aircraft General Purpose	GB	G-382
MIL-G-10924	Grease, Automotive and Artillery	GAA	G-403
MIL-G-18709	Grease, Ball and Roller Bearing	BR	--
MIL-L-19701	Lubricant, All Weather, Semi-Fluid, For Aircraft Ordnance	LAS	
MIL-G-21164	Grease, Molybdenum Disulfide (For Low and High Temperature)	GMO	G-353
MIL-G-23827	Grease, Aircraft and Instrument, Gear and Actuator Screw	GIA	G-354
MIL-G-25013	Grease, Ball and Roller Bearing: Extreme High Temperature	BRH	G-372

Table 2.4 - Alternate Lubricants for Military Symbol Oils

MILITARY SYMBOL OIL	ALTERNATE OIL	MILITARY SYMBOL OIL	ALTERNATE OIL
MIL-L-15016		MIL-L-17672	
MS 2075	MIL-L-17672, MS 2075 TH	MS 2075 H	MIL-L-17672, MS 2075 TH
MS 2110	MIL-L-17672, MS 2110 TH	MS 2110 H	MIL-L-17672, MS 2110 TH
MS 2135	MIL-L-17672, MS 2135 TH	MS 2135 H	MIL-L-17672, MS 2135 TH
MS 2190	MIL-L-17331, MS 2190 TEP		
MS 2250	MIL-L-17331, MS 2190 TEP	MIL-L-6082	
MS 3042	MIL-L-17672, MS 2075 TH	Grade 1065	MIL-L-22851, Type III
MS 3050	MIL-L-17672, MS 2135 TH	Grade 1100	MIL-L-22851, Type II
MS 3065	MIL-L-22851, Type III		
MS 3080	MIL-L-22851, Type III	MIL-L-17672	
MS 3100	MIL-L-22851, Type II	MS 2075 TH	MIL-L-19224, Grade A
MS 3120	MIL-L-22851, Type II	MS 2110 TH	MIL-L-19224, Grade A
MS 3150	MIL-L-22851, Type II	MS 2135 TH	MIL-L-19224, Grade B

Chapter 3

LUBRICATION AND CORROSION PREVENTION

3.1 LUBRICATION.

In naval ordnance systems, lubricants may serve many purposes, such as conducting the heat of friction away from the bearings, serving as a seal to exclude undesirable substances from the area being lubricated, and acting as a carrier for rust preventives, antifriction agents, extreme pressure additives etc. However, the primary use is, in general, to lubricate, i.e., to reduce friction, dissipate heat and prevent corrosion.

3.1.1 REDUCTION OF FRICTION. Whenever contacting surfaces of mechanical parts are in motion with respect to each other, a resisting force known as friction is present. Friction can be greatly reduced by use of the proper lubricant. Selection of the lubricating material for a specific application depends upon such factors as bearing and gear tooth pressure, operating temperature, type of enclosure, and the nature and extent of contact between surfaces. The purpose of the lubricant is to separate contacting surfaces by an oil or grease film and thereby reduce the frictional forces and the resultant wear or seizing which would otherwise occur.

3.1.2 DISSIPATION OF HEAT. Friction generates heat, which must be dissipated with sufficient rapidity to prevent damage to the equipment. This is true particularly in such devices as ball or roller bearings and high-speed gear trains, where the surfaces in contact are relatively small. Lubricant circulation systems are designed to dissipate the heat resulting from friction. Oil is preferred as a bearing lubricant because of its fluidity, but a grease or solid film may be required when there is a problem of retention of lubricant, as in ball and roller bearings, or under conditions of extreme pressure. Precautions must be taken against overfilling and overpacking, which can cause overheating, since excess lubricant can act as an insulating blanket around the moving parts and prevent dissipation of heat, especially in equipment operation at high speeds. Overfilling or overheating can also cause overflow of lubricants into adjacent electrical or hydraulic equipment, with consequent impairment. The instructions contained on the lubrication charts regarding the specified lubricants and lubrication procedures must be followed to insure optimum performance, reduction of friction and dissipation of heat.

3.1.3 PREVENTION OF CORROSION. Corrosion, particularly that resulting from continuous exposure to marine environment, is a problem of major importance in the operation of naval vessels. Equipment which is in temporary storage or standby condition must also be protected. In most cases, it is essential that equipment be protected so that its return to active service will require only minimum change, such as removal of preservatives. Greases containing corrosion inhibitors are often used as preservatives because they possess lubricating qualities and need not be removed from the equipment when it is reactivated.

For ordnance systems, the corrosion-inhibiting properties of a lubricant are almost equal in importance to its lubricating properties. Many metal parts are subject to corrosion when exposed to moist air. The application of oil, grease or dry film to a metal surface tends to protect it from air and moisture, thus retarding corrosion. It is essential that a lubricant selected for this purpose be one that will remain on the surfaces to be protected under adverse conditions of pressure and temperature, and be formulated to retard or prevent the formation of corrosion, particularly in the presence of moisture or salt water. Most of the lubricants discussed in this chapter contain corrosion inhibitors and other additives to improve stability and other properties.

3.1.4 LUBRICATION INSTRUCTIONS AND CHARTS. Lubrication instructions are issued for all naval ordnance equipment requiring lubrication. Such instructions may be issued as lubrication charts, Maintenance Requirements Cards, instructions, ordnance publications, or combinations of these. It is the policy of the Naval Ordnance Systems Command, whenever practicable, to prepare lubrication charts with complete lubrication instructions for all equipment. These charts are prepared on drawing

forms, with drawing numbers assigned. Such charts are more easily revised and distributed than ordnance publications.

The majority of the lubrication instructions for fire control instruments, regulators, optical instruments, and electric motors are contained in ordnance publications. The preparation of a separate chart or set of charts for each instrument or motor is considered impractical because of their large number. Therefore, general lubrication charts have been developed to serve as instructions for lubricating specific groups of instruments and motors, having similar mechanical components and lubrication requirements. Each List of Drawings, LD, number and type of equipment to which it applies appears in the Application Block of the general chart. If the equipment is classified CONFIDENTIAL, only the applicable LD numbers appear. The LD's are kept up to date with respect to the lubrication instructions for naval ordnance equipment.

In the case of regulators, a schematic diagram of the internal mechanism is given, in addition to the text of the lubrication instructions.

NOTE

It is extremely important that the lubrication instructions and lists of drawings be of the latest issue.

Where a general chart is not applicable to a particular instrument or motor, the lubrication instructions are given on an individual chart, or in text form, in accordance with the requirements of NAVORD OSTD 50. Lubrication charts generally indicate the approved lubricants and related materials, points and required frequency of application, and the target symbol of the specific lubricant or related material. The charts also contain additional information relating to lubrication, draining, filling, cleaning, and other maintenance functions to be performed in conjunction with lubrication. Table 3.1 shows the target symbols for various lubricants as they appear on lubrication charts. The next-to-last rectangular symbol is used to specify lubricants not otherwise represented, or to specify hydraulic fluids, coolants, and other related materials. The last symbol is used only for special notes, references, or instructions. The specified lubricants and related materials or their alternates should be used when available. If these are not available, the substitutes listed in this chapter and in chapter 4 may be used. Emergency substitutes should be used only as a last resort. As soon as the specified materials become available, substitutes should be replaced. In extreme emergencies and in cases where no substitute has been designated, another material having the next closest characteristics to the approved material should be selected from the tables.

3.2 LUBRICATION DEVICES.

3.2.1 ATTACHED DEVICES.

3.2.1.1 Fittings, Lubrication fittings are provided at the various locations on the equipment where lubricants are applied. The fittings include oil cups, hydraulic fittings, pipes and tubes, filler caps, level indicators, and drain plugs. Some of these devices are illustrated in figure 3.1. Approved types of fittings are covered in Specification MIL-F-3541 and the Military Standards referenced therein.

3.2.1.1.1 Protective Caps. Plastic protective caps are often provided for use on hydraulic fittings to prevent the entrance of dirt or water, and to protect the fittings during ice removal, painting, and similar operations. The cap (figure 3.1) usually of polyethylene plastic, should be sufficiently flexible and have a large enough flange to permit easy attachment and removal. It should fit tightly to form a leak-proof seal over a temperature range of -40°F to 200°F and up to a pressure of one foot of water. The caps tend to prevent the hardening of the grease in the small holes in the fittings, eliminate the need of masking prior to painting, and provide protection during storage. Protective caps may be reused several times and are obtainable in several colors under the following stock numbers:

Lubricating Fitting Protective Caps

G4730-270-3916	Black
G4730-270-3917	Blue
G4730-270-3918	Brown
G4730-270-3919	Green
G4730-270-3920	Red
G4730-270-3921	White
G4730-270-3922	Yellow

The push, Zerk-type fittings shown in figures 3.2 and 3.3 are obsolescent, and are usually found only on older equipment. Flush fittings are used where protruding types might easily be damaged or would interfere with moving parts. The flush, button-head, and pin-type fittings are commercial items.

Table 3.1 - Targets and Corresponding Lubricants Appearing on Lubrication Charts

TARGET SYMBOL	NAME OF LUBRICANT	SPECIFICATION
	Lubricating Oil, General Purpose	MIL-L-15016 (MS 3042) (Supersedes NS 3042)
	Lubricating Oil, General Purpose	MIL-L-15016 (MS 3050) (Supersedes NS 3050)
	Lubricating Oil, Aircraft Reciprocating (Piston) Engine	MIL-O-6082 (Grade 1065) (Supersedes NS 1065)
	Lubricating Oil, Preservative, Light	MIL-L-3503 (Supersedes 14L17 (Ord))
	Lubricating Oil, Aircraft Instrument, Low Volatility	MIL-L-6085 (Supersedes 14-0-20 (Ord))
	Lubricant, Worm Gear	MIL-L-18486 (NOrd) (Supersedes OS 1400)
	Grease, Extreme Pressure	MIL-G-17740 (NAVY) (Supersedes 14G9 (Ord))
	Grease, Bearing, for General Ordnance Use	MIL-G-16908 (BuOrd) (Supersedes 14G10)
	Grease, Instrument	MIL-G-15793 (BuOrd) (Supersedes 14G8 (Ord))
	Lubricant, Ball, and Roller Bearing	MIL-G-18709 (NAVY) (Supersedes 14L3)
	Lubricants, Fluids, Preservatives, etc., Other Than Those Indicated Above	As Specified
		Used To Designate Special Notes, References, and Instructions

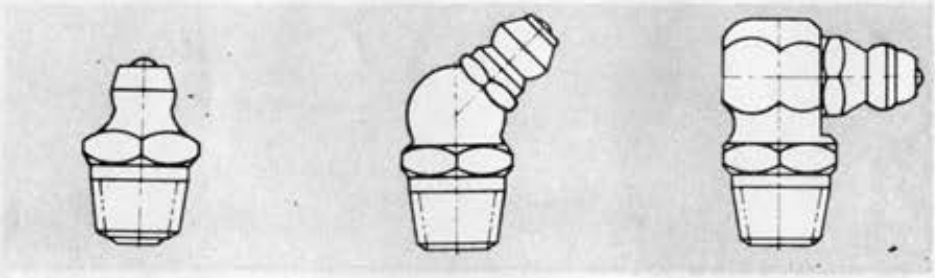

HYDRAULIC

FLUSH TYPE

BUTTON HEAD

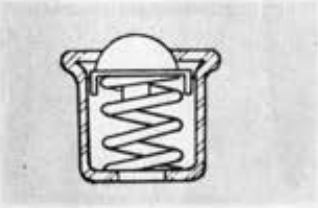

OIL CUP
(BALL VALVE)

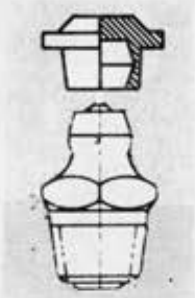

PROTECTIVE CAP FOR
HYDRAULIC FITTING

Figure 3.1 - Lubrication Fittings

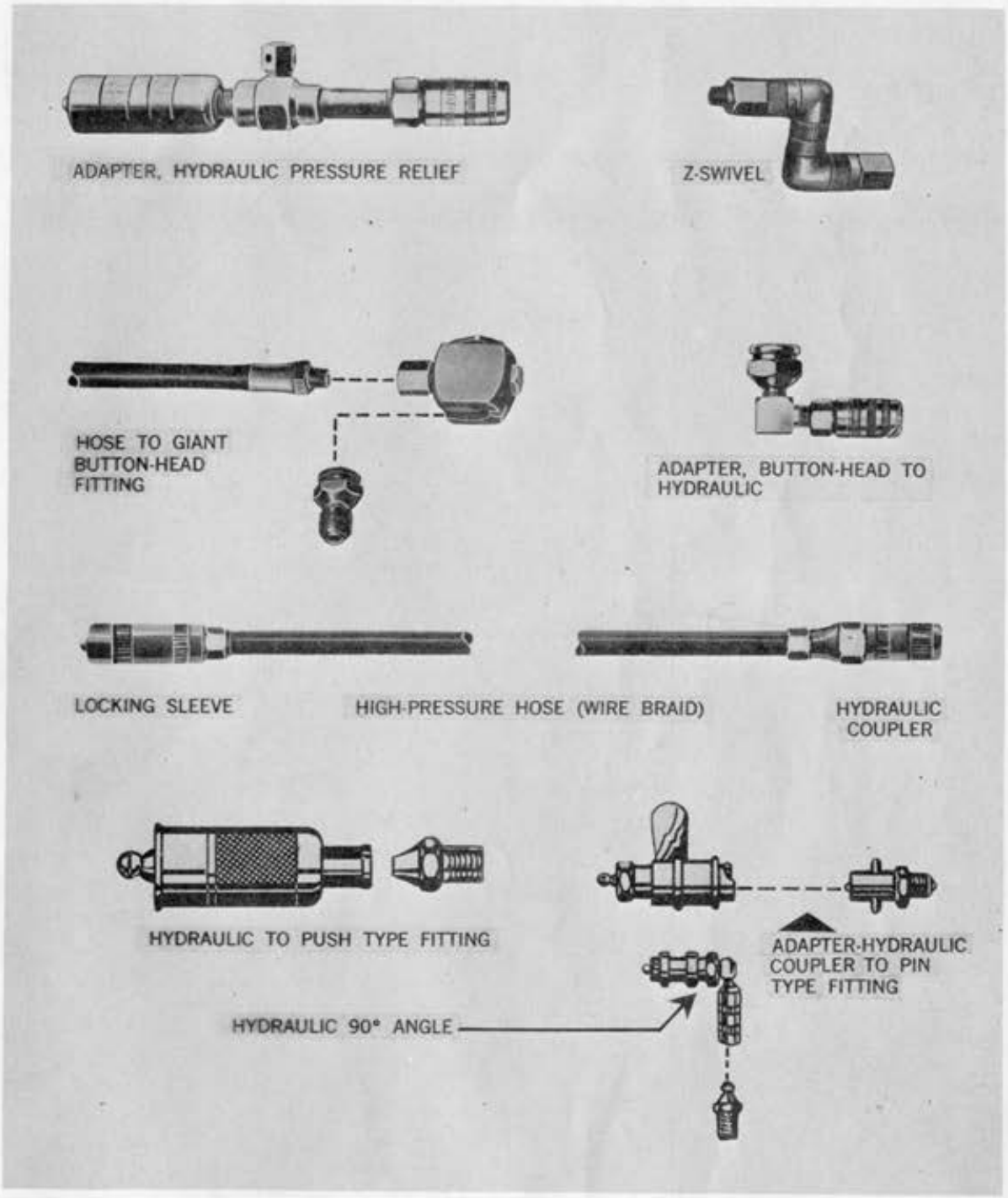

Figure 3.2 - Hose Assemblies and Adapters

PUSH-TYPE HAND GUN, WITH LOADER FITTING AND NOZZLES FOR PUSH-TYPE, FLUSH, AND HYDRAULIC FITTINGS

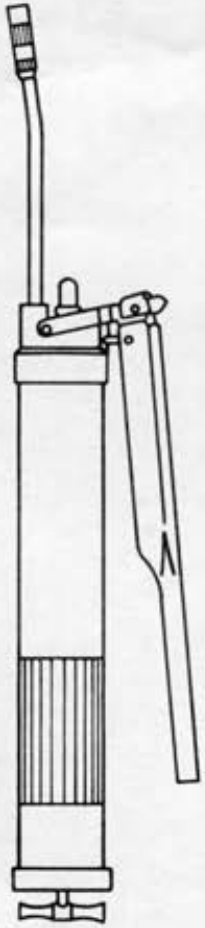

GREASE GUN, LEVER OPERATED

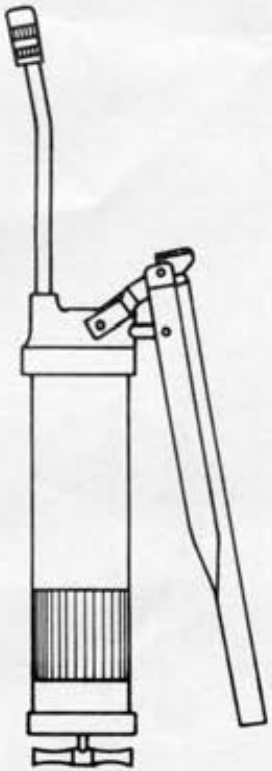

CARTRIDGE-TYPE GUN

Figure 3.3 - Lubrication Guns and Nozzles

Oil cups used on naval ordnance equipment are usually similar to the ball valve type shown in figure 3.1. Other types of oil cups are covered in specification MIL-C-1258.

Oil cups should be removed, cleaned and repacked periodically to remove hardened grease soaps which result from a combination of long standing under pressure and oil separation.

Lubrication through hydraulic type fittings requires the use of a grease gun or other pressure device. The pressure of the lubricant releases the check valve in the fitting. When not under pressure, the valve is kept closed by a spring (figure 3.1) to prevent the entrance of foreign matter. Prior to fitting the coupler of the grease gun to the fitting on the equipment to be lubricated it is necessary to use a wiping cloth to clean the head of the grease fitting to remove contaminants which would otherwise be forced through the fitting into the bearing. With most of the fittings currently used, such as the standard pin-type and button-head type, the coupler makes positive attachment to the fitting. With older type fittings such as the push type, sufficient force must be applied to the gun or hose nozzle to hold it against the fitting.

3.2.1.2 Forced-Feed Systems. In a forced-feed lubrication system, oil is supplied under pressure to the various points requiring lubrication. An oil pump draws oil from a sump or reservoir and discharges it into the pipes or tubing leading to the bearings. The oil is continuously circulated, thus aiding in dissipating heat. Strainers or filters usually are incorporated in such systems to keep the oil reasonably free of contaminants. Filters are discussed in greater detail in paragraph 3.2.1.3. Usually, where oil is under pressure, in either a lubricating or a hydraulic system, gages are provided to aid in maintaining correct operating pressures. Low pressures may indicate pump failure or excessive leakage. High pressures may indicate unsafe conditions such as clogged lines or filters, causing an insufficient supply of oil to the moving parts.

3.2.1.3 Filters. Filters are usually provided in both forced-feed lubrication and hydraulic systems to remove contaminants from the oil entering bearings, cylinders, valves, and other mechanisms. Filters used in naval ordnance equipment serve mainly to remove insoluble particles of metal, dust, carbon, or oxidation products. A full-flow filter is one which filters all of the oil which passes through the pump. Such a filter is provided with a relief valve (figure 3.4) to allow bypassing of the oil in case of an excessive restriction of flow through the filter element. A bypass filter is one which filters only a portion of the oil passing through the pump. Bypass filters which are usually designed to remove particles finer than those removed by the full-flow type, offer more resistance to the flow of oil and therefore filter at a slower rate than full-flow types. A differential pressure indicator may be incorporated in the filter housing to warn of a clogged filter. The differential pressure indicator setting should be lower than the relief valve setting so that the clogged filter warning will occur prior to bypassing of dirty fluid through the relief valve. Requirements for a differential pressure indicator are included in specifications MIL-F-8815 and MIL-F-27656. The MIL-F-8815 type of filter is shown in figure 3.5.

3.2.1.3.1 Types of Filters. The type of filter used in a specific equipment depends on the size and type of the smallest particles to be removed. Filters of the metal-plate type are made with spacers of various thickness. The oil passes between the plates, and the minimum size of particles held back is determined by the thickness of the spacers. A self-cleaning device, consisting of blades rotating between the filter plates, is incorporated. Particles as small as 40 microns, 0.0016 inch, may be removed with this type of filter, figures 3.6 and 3.7. For filtration of particles of ten microns (0.0004 inch or less) filters using replaceable elements of cellulose, felt, or other fibrous materials are available; these are often called micronic filters. The compressed disc-type filter (figure 3.8) employs plastic-impregnated discs. The oil flows between the discs and deposits the sediment at the edges of the discs. The filter elements can be cleaned in a solvent and reused. Most filters are provided with drain plugs to allow removal of sediment and water.

Other types of filters are available, such as those with wire-wound elements, metal screens, or fine powders. Some of those containing absorbent powders are capable of removing not only solid particles but also water or dissolved substances. Therefore, when designing equipment, it is necessary to select filter elements which do not remove desirable ingredients, such as additives, used to improve the properties of oils and hydraulic fluids. For instance, filter elements with certain kinds of absorbent powders should not be used with hydraulic

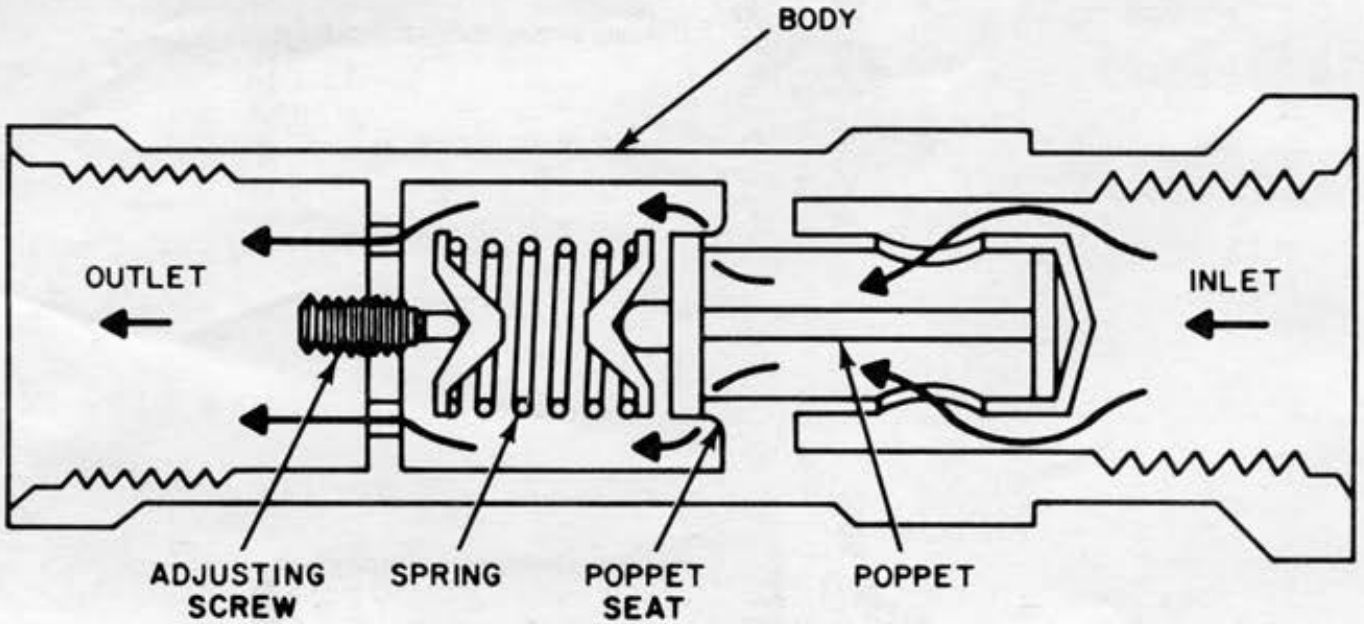

Figure 3.4 - Reservoir Relief Valve Schematic

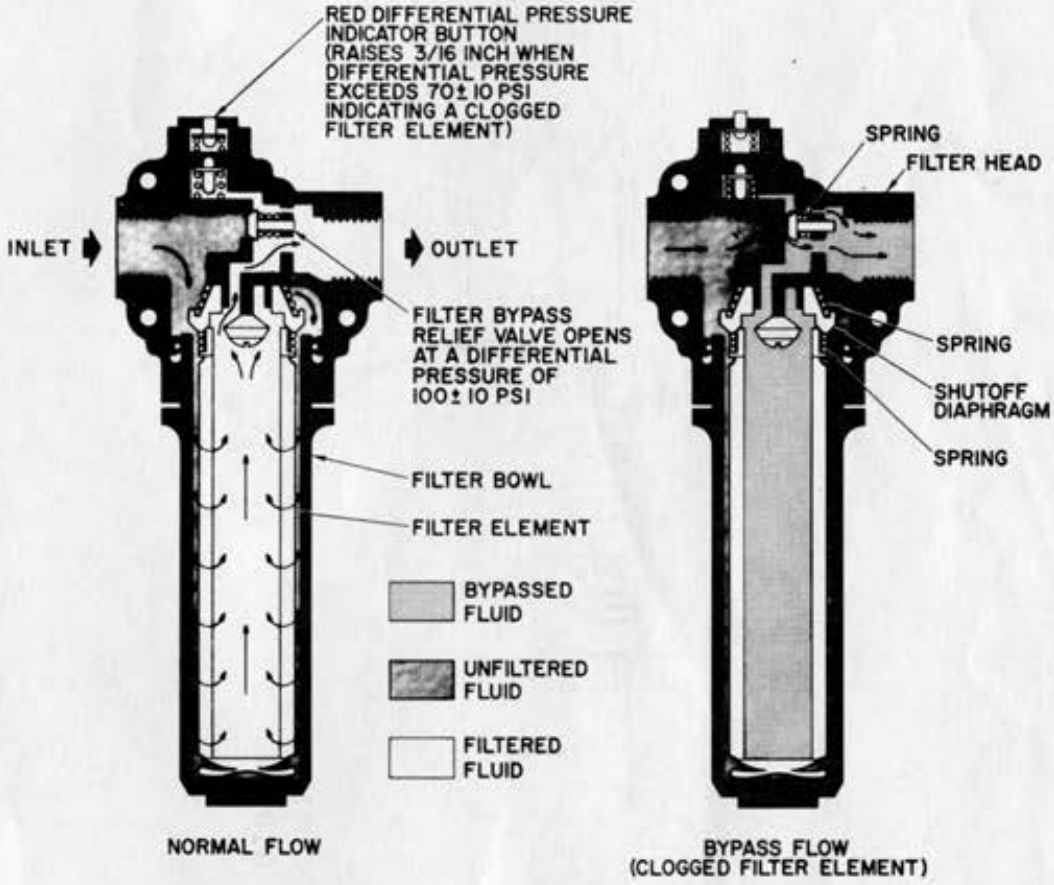

Figure 3.5 - MIL-F-8815 Type Filter Assembly

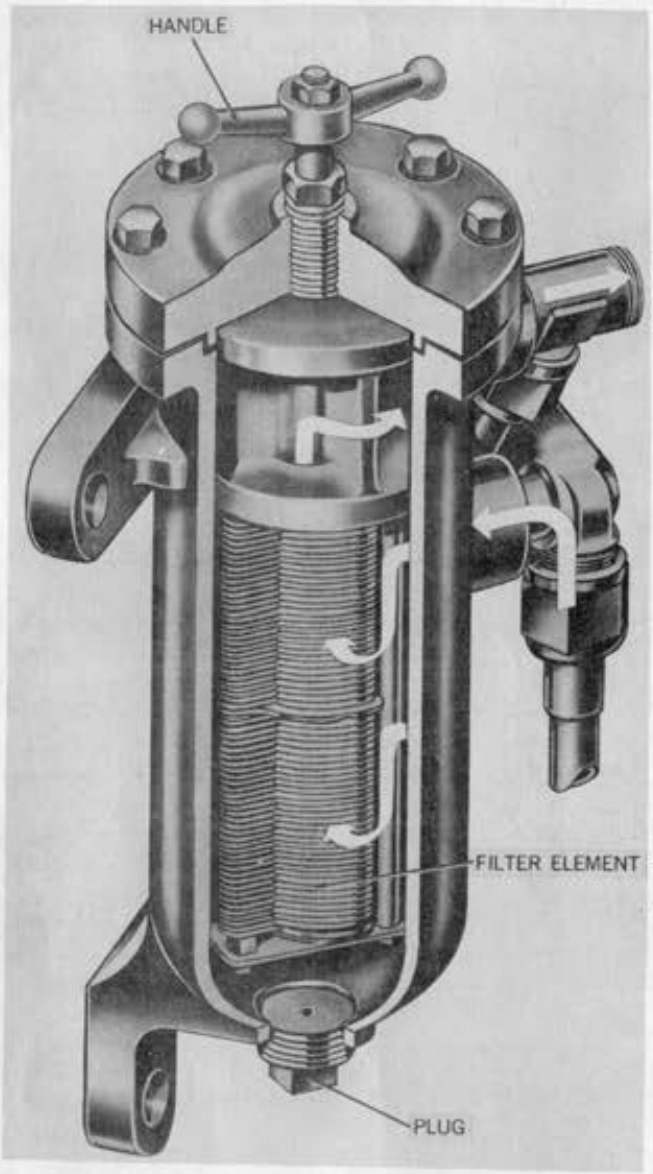

Figure 3.6 - Metal Plate Filter

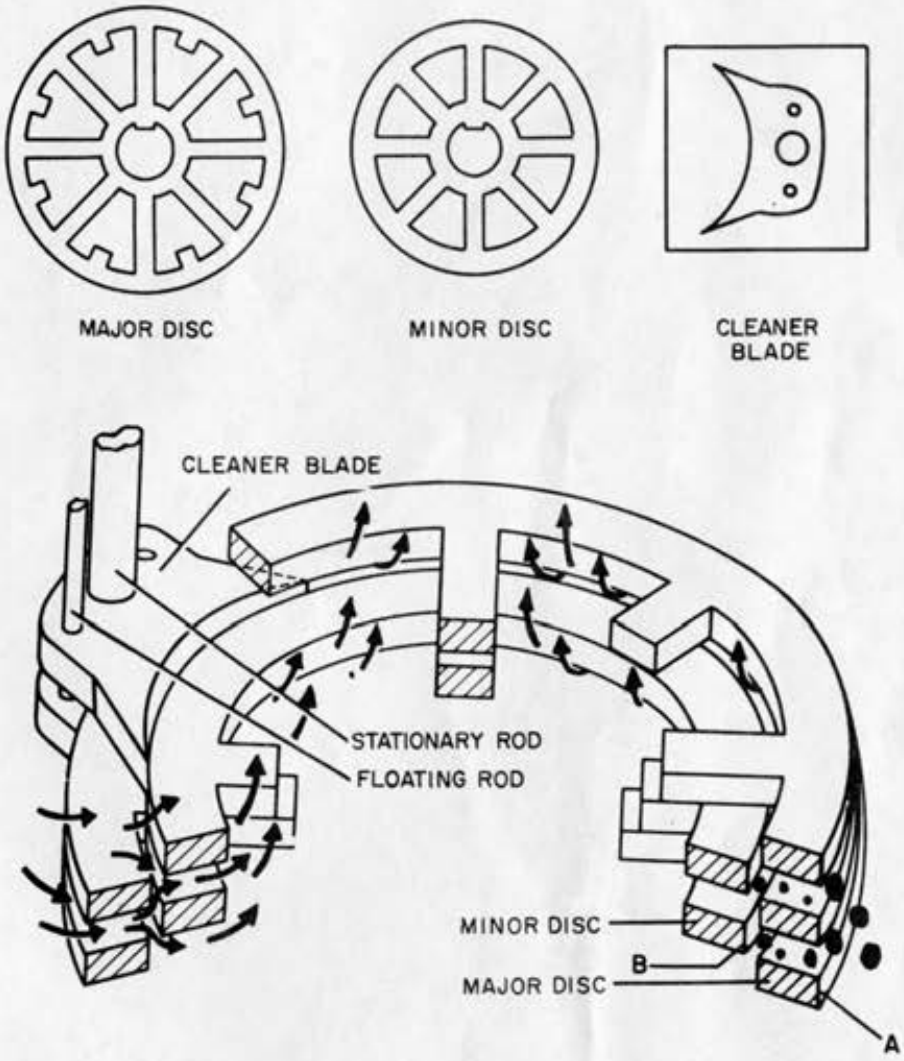

DIRTY FLUID ENTERS THE FILTER AT THE INLET AND IS BAFFLED THROUGHOUT THE HOUSING. LINE PRESSURE FORCES LIQUID TOWARDS THE ALL-METAL, EDGE-TYPE CARTRIDGE. ALL LARGE PARTICLES (OVER .012") ARE STOPPED ON THE OUTSIDE SURFACE (A) OF THE MAJOR DISCS. SMALLER PARTICLES ENTER BETWEEN MAJOR DISCS WHERE ALL DIRT LARGER THAN SPECIFIED DEGREE OF FILTRATION (40, 75 OR 125 MICRONS) IS STOPPED BY THE SECOND ALL-METAL, EDGE-TYPE BARRIER (B).

Figure 3.7 - Metal Plate Filter Operation

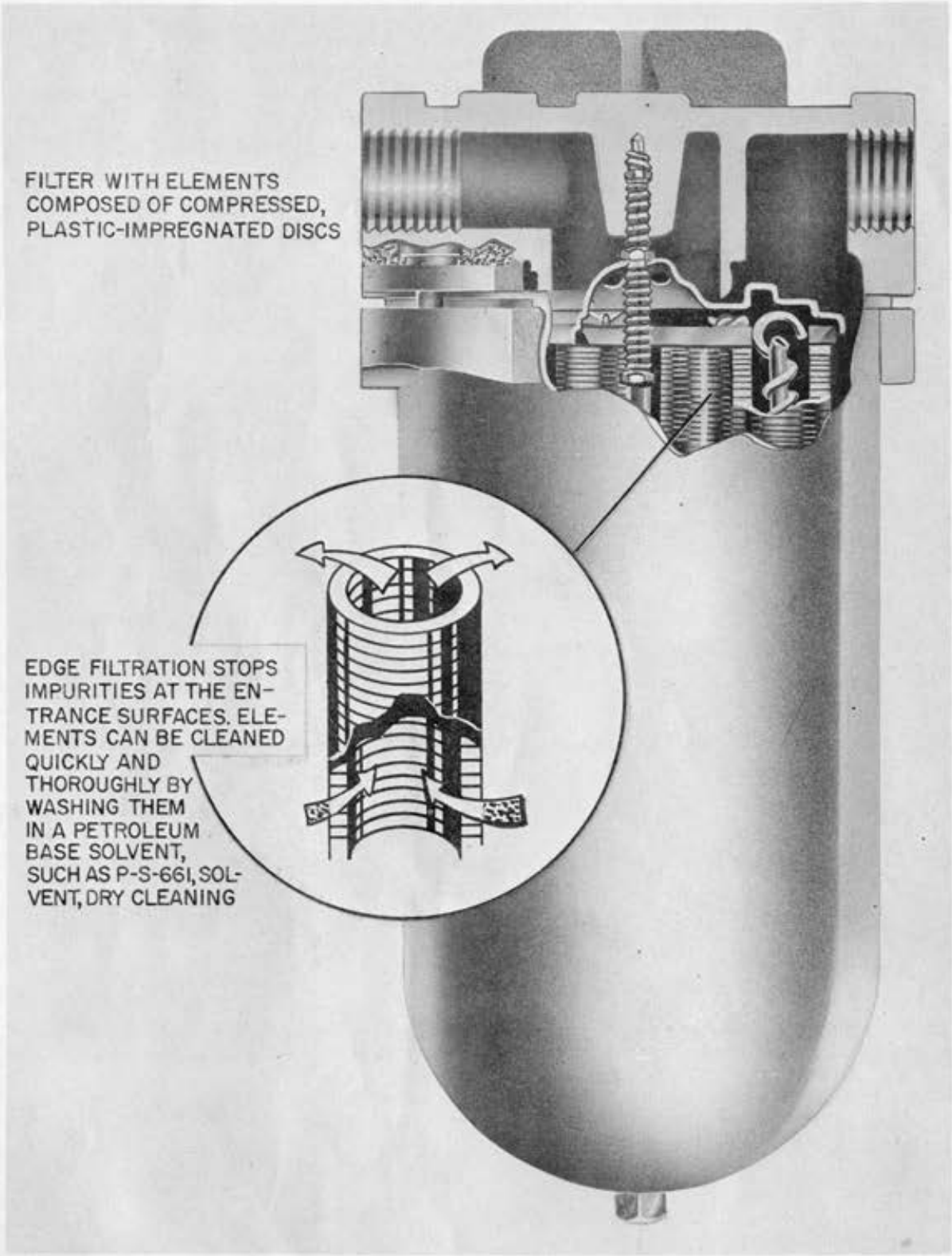

Figure 3.8 - Compressed-Disc Type Filter

fluids. Typical filters are illustrated in figures 3.6, 3.7, 3.8, and 3.9. Bypass and line filters shown in figure 3.9 are covered by specifications MIL-F-3690, MIL-F-8815A, and MIL-F-5504. The types of filters shown in figures 3.6 and 3.8 are commercial items. In critical applications where servo valves or close tolerance moving parts are present absolute type filters conforming to specification MIL-F-8815 (15 microns absolute) or MIL-F-27656 (5 microns absolute) should be used. These filters are advantageous as the absolute filter ratings are controlled by means of a standardized test procedure whereas the typical nominally rated filter depends on the manufacturer's rating methods, which may vary between manufacturers.

3.2.1.3.2 Filter Maintenance. To insure proper operation, it is necessary that filter elements be replaced or cleaned periodically as directed by the instructions for the particular elements. Maintenance instructions for filters with replaceable elements usually specify the time intervals for replacement; cleaning procedures are given for filters with reusable elements. Symptoms of poor operation such as excessively high pressures, bypassing, or presence of dirt in the oil indicate that the filters need to be cleaned or replaced to insure efficient operation.

3.2.2 PORTABLE DEVICES.

3.2.2.1 Lubricators. Lubrication devices for applying lubricants to naval ordnance equipment include the following:

a. Oil cans of the pushbottom, pump, or filler type, figure 3.10.

b. Manually operated guns, gun loaders, oil pumps, accessories and adapters, figures 3.2, 3.3, 3.11, and 3.12.

c. Electric- or air-powered guns or pumps and accessories, figure 3.13.

Pumps are used for transferring lubricants from the original containers to gear housings, sumps, and reservoirs. For such uses, the pressures are relatively low and medium- or low-pressure hose, fabric-braid type is used.

For grease lubrication through hydraulic fittings, hand- or power-operated guns or pumps developing pressures from 25 psi to 10,000 psi are used, figures 3.3, 3.11, 3.12, and 3.13. With this type of equipment, high-pressure hose, wire-braid type, figure 3.2, must be used.

Approved oil cans are covered by specification GGG-O-591 approved hand guns by specifications MIL-G-3859, and MIL-G-16566 (SHIP); and hose assemblies by specification MIL-H-3868. High pressure lubrication equipment such as that shown in figure 3.13 is a commercial item.

3.2.2.1.1 Lubricant Pump, Bucket-Type. The bucket-type, hand-operated, lubricant pump, figure 3.11, is typical of lubrication devices for naval ordnance equipment and is covered by specification MIL-L-3910 and the Military Standards referenced therein. It is used to apply grease under high pressure through hydraulic type fittings, figure 3.1. An attachment is provided for loading hand-operated grease guns. Various accessories, figures 3.2 and 3.11, can be attached to enable application of lubricant in hard-to-reach locations.

Because the parts and accessories employed in the bucket-type pump are typical of those used for lubrication, a brief description follows:

Bucket. The container; capacity 25-30 pounds.

Pump Assembly With Follower Plate. Used for pumping grease.

Hose. A 10-foot length of 3/8-inch, oil-resistant, high-pressure rubber hose, with one male fitting for hydraulic coupler and one female fitting for attaching to bucket-pump loader adapter.

Loader Adapter. Fitting attached to pump outlet, with provision for attaching hose and gun-loader valve.

Loader Valve. A ball valve attached to the pump through the loader adapter, for loading hand grease guns.

Hose Plug. A dead-end hydraulic fitting to which the hydraulic coupling at the end of the hose may be attached when the hose is not in use, or when the pump is being used as a gun loader.

Stowing Guide. Used to hold the end of the hose firmly while the hose is attached to the hose plug.

Carrying Handle. For lifting or carrying the entire assembly.

3.2.2.2 Accessories. In addition to those described above, other accessories are used for attaching hose or gun outlets to various types of fittings. Some of these, with the fittings to which they are applied, are illustrated

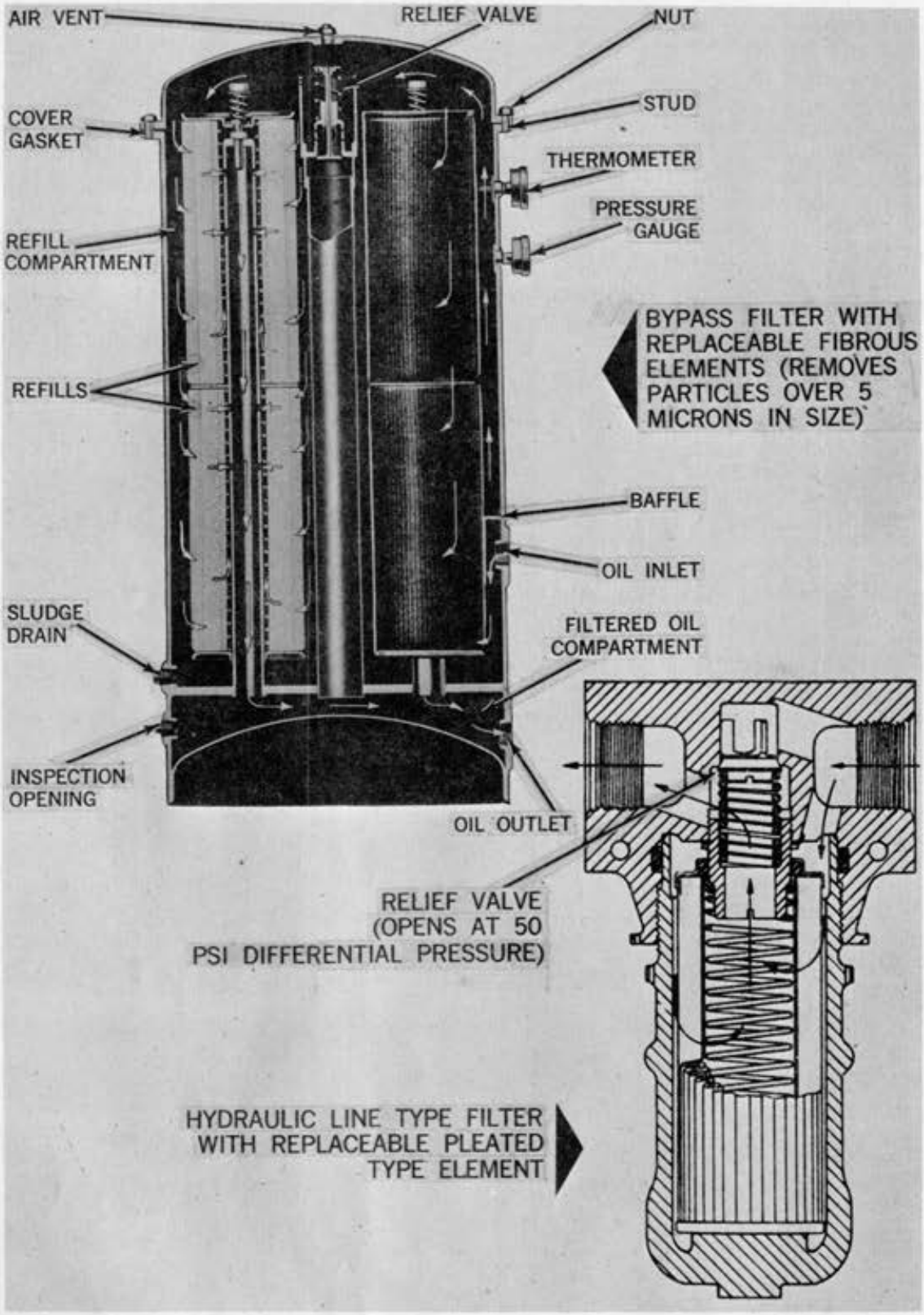

Figure 3.9 - Bypass and Line Filters

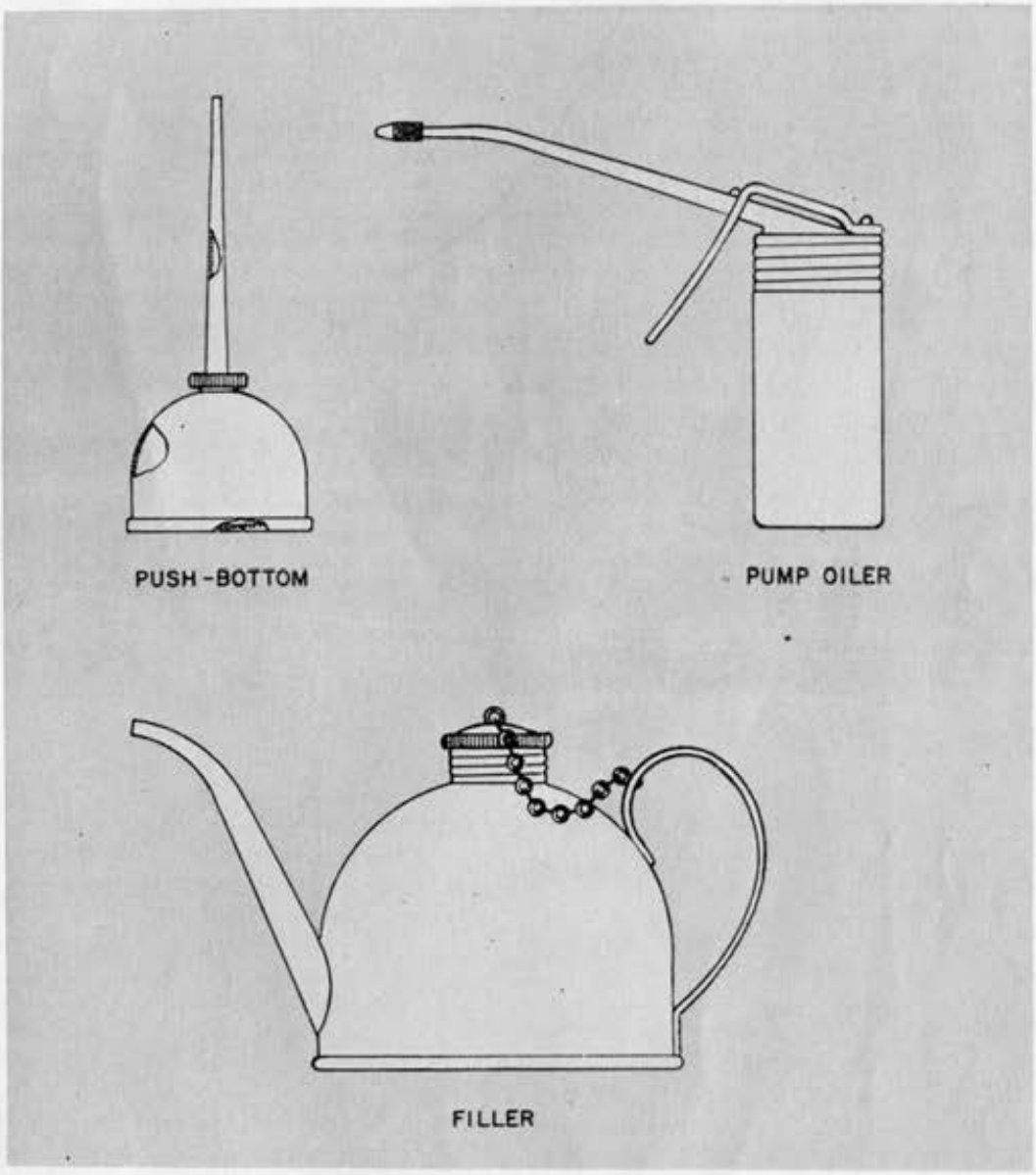

Figure 3.10 - Oil Cans

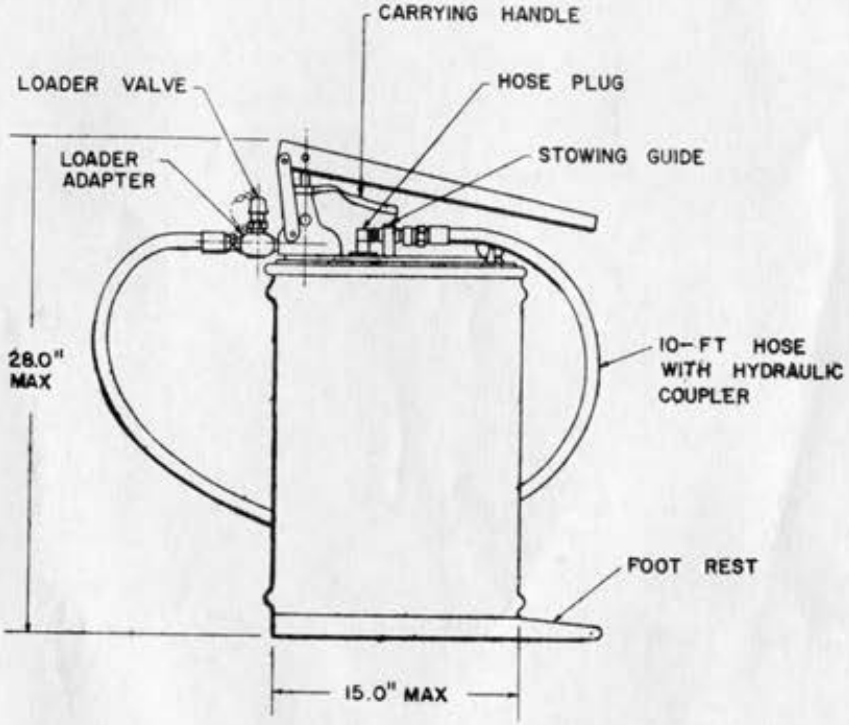

LUBRICANT PUMP, BUCKET TYPE,
HAND OPERATED (25-POUND NOMINAL CAPACITY)

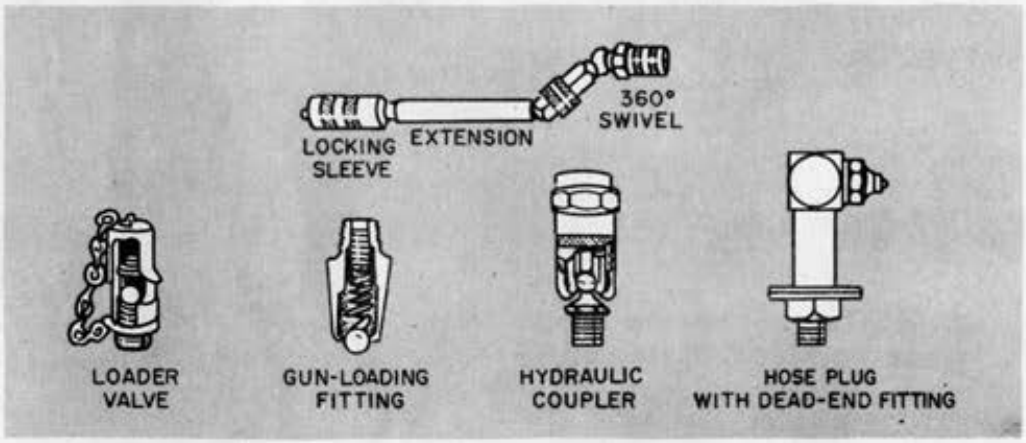

Figure 3.11 - Combination Bucket Pump and Gun Loader, with Accessories

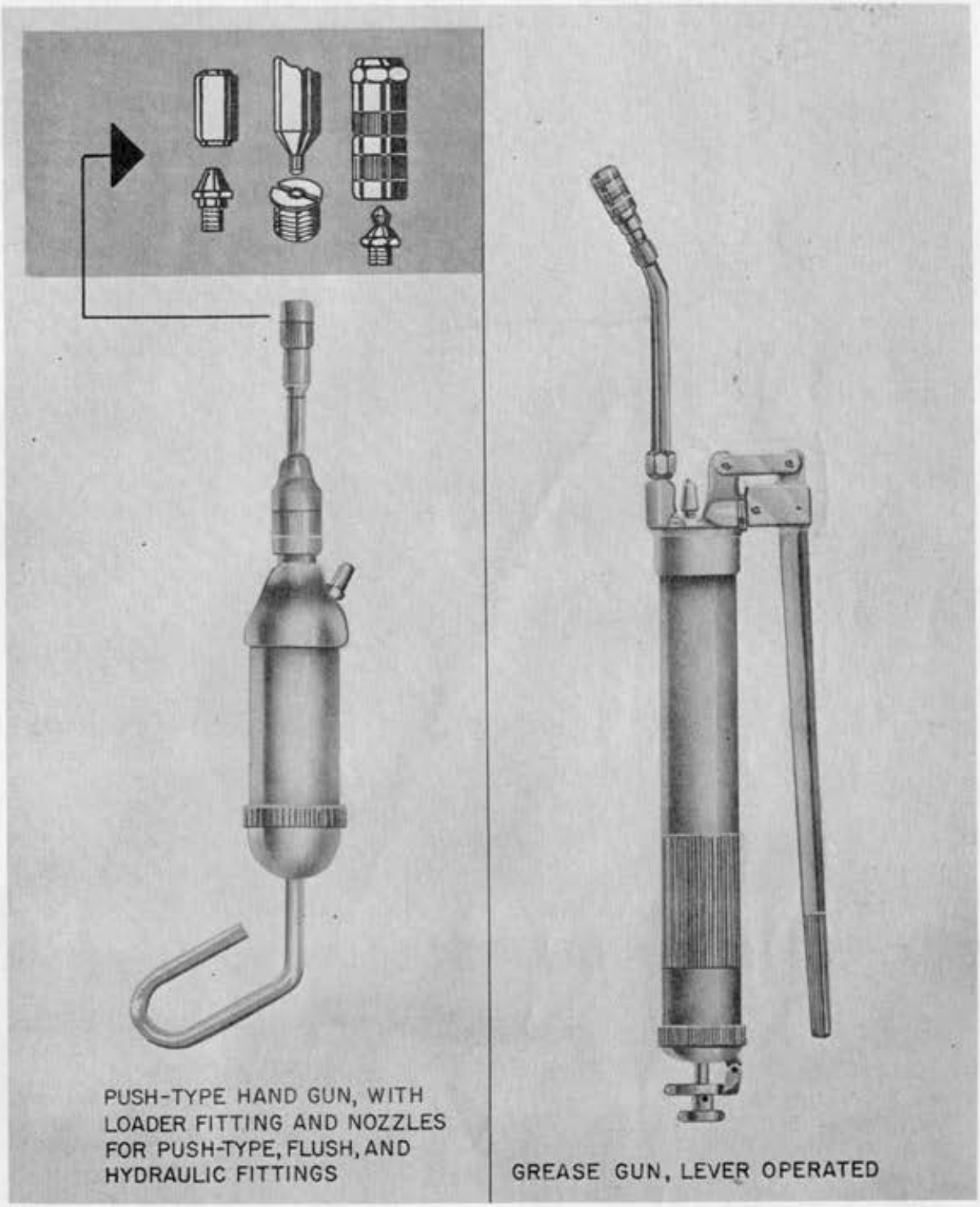

Figure 3.12 - Lubrication Guns and Nozzles

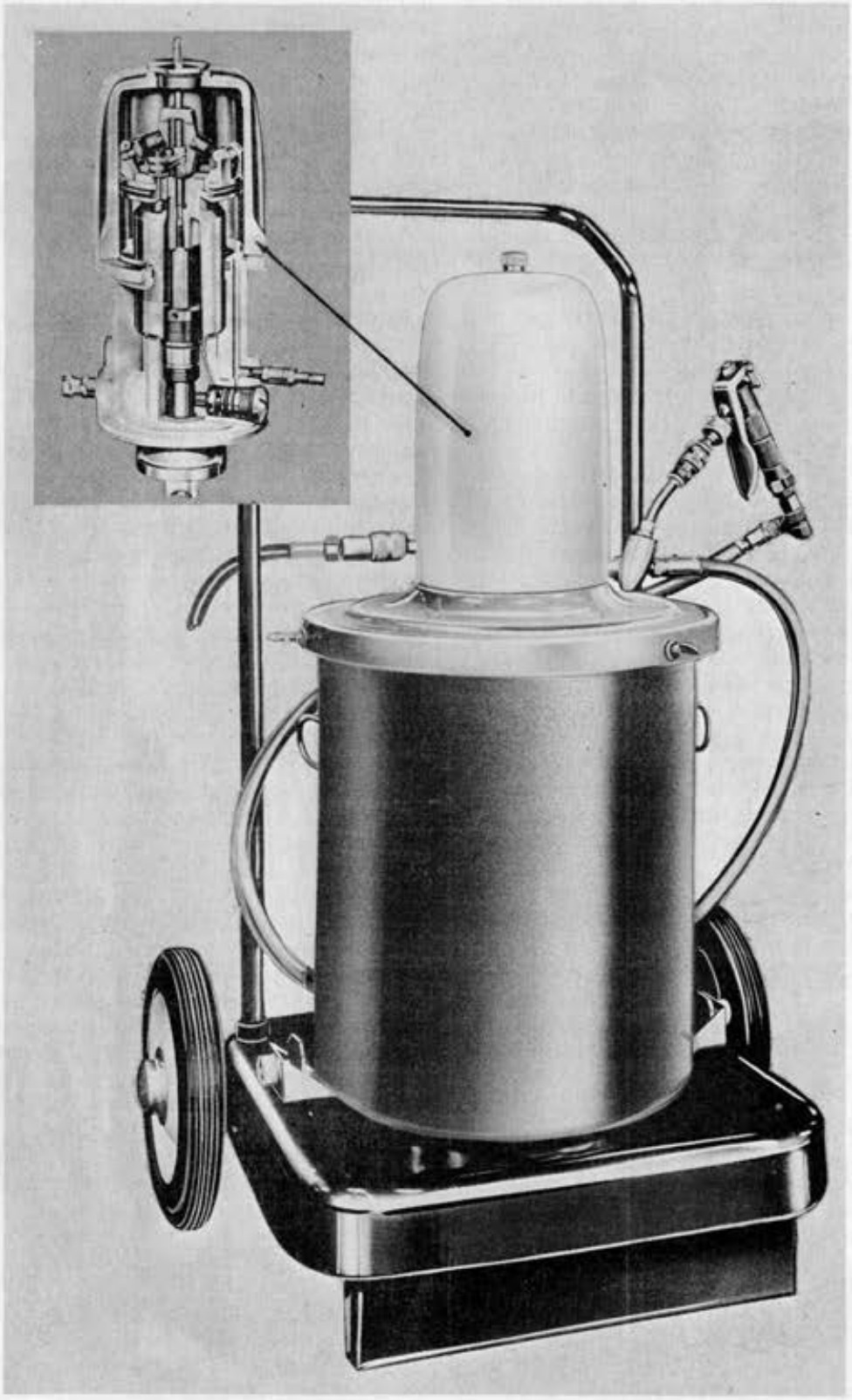

Figure 3.13 - Air-Powered High-Pressure Lubricator

in figures 3.2 and 3.3. The approved types are covered by specification MIL-L-4387 and the Military Standards referenced therein.

3.2.2.2.1 Hydraulic Coupler. The hydraulic coupler, figure 3.11 is a device used for attaching high pressure lubricators to the standard hydraulic fittings shown in figure 3.1. The coupler is attached by spring-actuated jaws, which exert a strong gripping action on the fitting while the grease pressure acts on a sealing nozzle to prevent leakage.

3.2.2.2.2 Adapters. A gun or hose with a hydraulic coupler may be modified for use on other types of fittings by using the proper adapters selected from those illustrated in figure 3.2.

3.2.2.3 Portable Filters. For purifying or clarifying hydraulic fluids, a filtering device with a self-contained pump such as that illustrated in figure 3.14 is used. When a sample of fluid from the hydraulic system shows the presence of dirt or water, the fluid should be drained and pumped through the portable filter. Careful attention should be given to the instructions furnished with the equipment, with due emphasis on cleanness and use of the proper type of filter element recommended, to avoid removal of additives from hydraulic fluids. See paragraph 4.1.2.10.1 for filtering procedures to insure cleanliness of hydraulic fluids.

3.3 LUBRICANTS.

3.3.1 TYPES AND PROPERTIES. Lubricants for naval ordnance systems are selected on the basis of necessary or desired characteristics including:

a. Maximum reduction of friction between bearing surfaces

b. Corrosion inhibiting properties

c. Stability over a wide temperature range

d. Ability to withstand high pressures

e. Low volatility at operating temperatures

f. Resistance to oxidation

g. Resistance to emulsification

h. Resistance to environmental contamination by the particular application

Although the properties of various lubricants are listed herein, the applicable specifications should be consulted and the properties and characteristics of the material reviewed prior to its selection for a specific application.

For many applications, liquid lubricants such as petroleum or synthetic oils are suitable, particularly if the lubricant can be retained, as in an oil bath, a gear box, or in a forced-feed system. Where conditions are such that oil is not readily retained, or additional protection against corrosion is needed, greases are used. In applications where the operating temperature is too high for satisfactory lubrication by oils or greases, graphite, molybdenum disulfide, or bonded dry film made from these materials may be used. If solid or dry film lubricants are used, the bearing surfaces may require pretreatment prior to application in order to insure good adhesion of the lubricant film. Some of these applications require the use of preservative lubricants during standby periods.

3.3.1.1 Restrictions for Special Lubricants. Special lubricants which are required for specific naval ordnance operational requirements should have the desired characteristics for a marine environment. The constituents of such special lubricants must be comparable to those in approved lubricants. Special lubricants must be approved before they are used on naval ordnance equipment.

3.3.2 Petroleum-Base Lubricating Oils. Petroleum-base lubricating oils, or mineral oils, are composed mainly of hydrocarbons. The important properties of these oils are viscosity, viscosity index, pour point, resistance to deterioration, and retardation of corrosion. Additives are used to improve properties such as viscosity index, pour point, oxidation stability and corrosion prevention. Viscosity of the oils depends largely on the fraction of petroleum which is selected. Corrosion-inhibited oils should be used where standby storage or continued exposure are involved. Specification and stock numbers for oils are given in table 2.1.

3.3.2.1 Military Symbol Oils. Military Symbol (MS) oils are petroleum base oils covered by certain military specifications. They contain no corrosion inhibitors. Some of these oils are used in ordnance systems for oil bath, oil can, or forced-feed lubrication where the equipment is enclosed or otherwise protected

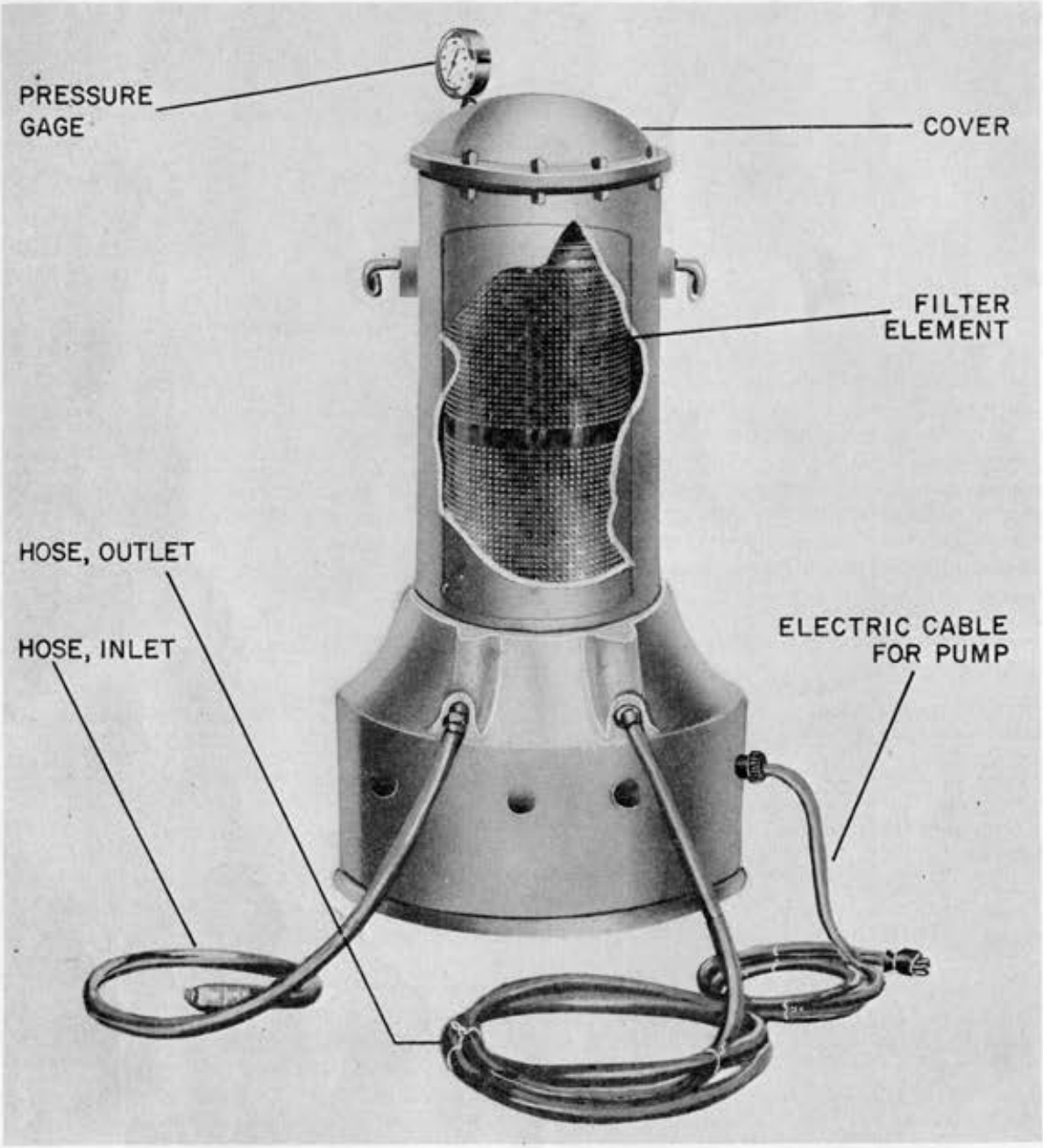

Figure 3.14 - Portable Filtering Equipment

from corrosion environment. The symbol used to designate these oils is a four digit number in which the first digit indicates the series or type and the last three digits indicate the approximate Saybolt viscosity. Viscosities are measured at 130°F for all series 2, series 8, and series 9 oils. All other series are measured at 210°F. The lubricating oil series is as follows:

Series	Type
1	Lubricating Oil, Aircraft Engine
2	Lubricating Oil, General Purpose
3	Lubricating Oil, General Purpose
4	Lubricating Oil, Compounded
5	Lubricating Oil, Cylinder, Mineral
6	Lubricating Oil, Compounded
7	Lubricating Oil, Compounded
8	Lubricating Oil, Compounded
9	Lubricating Oil, Diesel Engine

The following illustrates the symbol system:

a. MS 2135 indicates a general purpose oil (series 2) having a viscosity of approximately 135 S.U.S. at 130°F.

b. MS 4065 indicates a compounded oil (series 4) having a viscosity of approximately 65 S.U.S. at 210°F.

3.3.2.1.1 Comparison with SAE Oils. Many MS oils correspond in viscosity ranges to certain oils designated by SAE (Society of Automotive Engineers) numbers, as indicated in table 3.2. It should be emphasized, however, that the SAE numbers constitute a classification in terms of viscosity only, without considering other characteristics or quality factors. Accordingly, the substitution of SAE oils for Military Symbol oils is permissible only in emergencies, as explained in paragraph 3.3.2.1.4.

3.3.2.1.2 Characteristics and Uses of MS Oils. Some of the characteristics and uses of MS oils approved for naval ordnance systems are given in table 3.3. More complete data will be found in the applicable specifications. The oils listed are intended for use where:

a. Temperatures within the equipment do not exceed 250°F or fall below 0°F in normal operation.

b. Ambient temperatures are between 0°F and 150°F.

c. Protection against corrosion is adequate without inhibitors.

d. Loads are within moderate limits.

e. Retention, replenishment, or circulation of the oil is provided for.

Where operating temperatures are above 250°F, or below 0°F, lubricants other than MS oils should be selected from those approved for use in naval ordnance systems. Oils of lower viscosity should be used where splash or forced circulation lubrication systems are employed. These systems are preferred when

Table 3.2 - SAE Numbers, Viscosities, and Corresponding MS Numbers

SAE NO.	VISCOSITY (SUS)				MS NUMBER
	0°F		210°F		
	MIN	MAX	MIN	MAX	
5W	--	4,000	39	--	--
10W	6,000[1]	12,000	39	--	2075 TH, 2110
20W	12,000[2]	48,000	39	--	2110
20	--	--	45	58	2110, 2135, 2190 TEP, 3050, 9170
30	--	--	58	70	1065, 3050, 9250
40	--	--	70	85	9370
50	--	--	85	110	1100, 3100, 9500

[1] Minimum viscosity at 0°F may be waived if viscosity at 210°F is not below 40 SUS.

[2] Minimum viscosity at 0°F may be waived if viscosity at 210°F is not below 45 SUS.

dissipation of heat is a major factor, as in enclosed gear trains, high speed gimbal or socket joints, and linkages. In comparing viscosities of oils, care must be taken that the values compared are at the same temperature. See figure 3.15 for the relationship between viscosity and temperature, and figure 3.16 for inter-relation of viscosity values in centistokes and Saybolt universal seconds.

In general, the series 1000 oils have higher viscosity indices and lower pour points than the corresponding oils of the 2000 and 3000 series. Specification requirements for the 3000 series oils differ from those of the 2000 series by including minimum viscosity index values.

Table 3.3 - Properties and Principal Uses of Military Symbol Oils, Petroleum Base

SPECIFICATION	VISCOSITY RANGE SUS 130°F	VISCOSITY RANGE SUS 210°F	POUR POINT MAX °F	VISCOSITY INDEX MIN	PRINCIPAL USES	ALTERNATES
MIL-L-6082 MS 1065	250[1]	62-68	0	100	Spur or helical gear reduction units, high speed, running in an oil bath; worms and worm wheels operating in enclosed brackets containing other working parts for which a heavier oil is not suitable.	MIL-L-22851 Type III
MS 1100	500[1]	93-103	10	95	Force feed to gears and spindles of main engine of hot running torpedoes; breech-door mechanisms on torpedo tubes.	MIL-L-22851 Type II
MIL-L-15016 MS 2110	90-120	45[1]	0	--	Various components on specified torpedoes. Also used as a second choice alternate for the primary application listed below for MS 3042.	MIL-L-17672 MS 2075 TH
MS 2135	120-145	50[1]	0	--	General purpose lubricant, moderate loads.	MIL-L-15016 MS 2110
MS 2190	185-205	58[1]	35	--	General purpose lubricant, moderate loads.	MIL-L-17331 MS2190TEP
MS 3050	125[1]	45-55	0	75	General use on shipboard equipment for oil can point lubrication and for forced-feed circulating	MIL-L-17672 MS 2135 TH

Table 3.3 - Properties and Principal Uses of Military Symbol Oils, Petroleum Base (Continued)

SPECIFICATION	VISCOSITY RANGE SUS 130°F	210°F	POUR POINT MAX °F	VISCOSITY INDEX MIN	PRINCIPAL USES	ALTERNATES
MIL-L-15016 MS 3050 (Cont'd)					systems, spur or helical gear sets, high speed, light duty, running in an oil bath, hand operated or power driven; ball and roller bearings which depend on free flow of lubricant to working surfaces; heavily loaded guide slots on power transfer trays and slide guide slots on 16" turrets.	
MIL-L-15018 MS 5190	1500[1]	180-220	60	--	Lubricating components within the main engine housings of specified torpedoes.	
MS 5230	1800[1]	220-240	60	90	General purpose lubricant, heavy loads.	
MIL-L-17331 MS 2190 TEP[2]	170-190[1]	53	20	--	General purpose lubricant, moderately heavy loads and lubricating specified torpedo components or as a second-choice alternate for applications listed for MS 1065.	MS 1065 or MS 1100
MIL-L-17672 MS 2075 TH[3]	70-98[1]	40-47	-20	--	A buffer fluid and light lubricant. Used in the hydropneumatic counter-recoil mechanisms of certain 5"/38- and 5"/54-caliber housings and of all major caliber slides. Also used in specified buffers. Spur or helical gears in brackets, and all	MIL-L-17672 MS 2075 TH

Table 3.3 - Properties and Principal Uses of Military Symbol Oils, Petroleum Base (Continued)

SPECIFICATION	VISCOSITY RANGE SUS 130°F 210°F	POUR POINT MAX °F	VISCOSITY INDEX MIN	PRINCIPAL USES	ALTERNATES
MIL-L-17672 MS 2075 TH[3] (Cont'd)				simple linkages, or other close-fitted working parts not equipped with lubrication fittings, and in other applications where anticorrosion and antioxidation properties are required.	

[1] Approximate value from viscosity-temperature chart
[2] Replaces MS 2075 and MS 3042 of MIL-L-15016
[3] Replaces MS 2250, MS 3065, MS 3080, MS 3100, MS 3120 and MS 3150 of MIL-L-15016

3.3.2.1.3 Alternates. The 1000 and 3000 series oils may be used as alternates to the 2000 and 5000 series oils of the same viscosity range, e.g. MS 1065 (viscosity 62-68 S.U.S. at 210°F) may be used as an alternate to MS 2250 (viscosity 68 S.U.S. at 210°F) or MS 3150 (140-160 S.U.S. at 210°F) for MS 5150 (135-165 S.U.S. at 210°F). See table 3.3.

3.3.2.1.4 Substitutes. In emergencies, a 2000 series oil may temporarily replace a 3000 series oil of corresponding viscosity, as for example MS 2075 for MS 3042. Similarly, SAE oils of corresponding viscosity may temporarily replace the heavier oil MS 5230; or an oil of somewhat lower viscosity may be substituted as a temporary replacement. In all cases where alternates or substitutes are used, they must be replaced by the recommended or approved lubricants as soon as possible.

3.3.2.2 Petroleum-Base Oils with Corrosion Inhibitors. Petroleum base oils containing corrosion inhibitors are listed in table 3.4. These oils provide corrosion protection to metal surfaces and are approved and preferred for use in naval ordnance systems. They should always be considered for use where short-term preservation is a requirement. In general, these oils may be used at temperatures lower than those for which the MS oils are suitable.

3.3.2.3 Petroleum-Base Gear Oils. The following two oils, approved for use as gear lubricants under extreme pressure conditions, contain additives to improve their load-carrying properties:

MIL-L-6086	Lubricating Oil, Gear, Petroleum Base
MIL-L-18486 (NOrd)	Lubricant, Worm Gear

These oils are required to pass performance tests to demonstrate their effectiveness in preventing wear and improving efficiency in operation. They are also required to be noncorrosive to copper. Some of the characteristics of these oils are given in table 3.5.

3.3.2.4 Lubricant for Chains, Exposed Gears, and Wire Rope. Specification VV-L-751 covers highly viscous petroleum-base lubricants for chains, exposed low-speed gears having wide dimensional tolerances, wire ropes, and cables subject to continuous or intermittent underwater exposure. These materials, also known as cable or wire rope preservatives, wire rope dressings, wire rope greases, wire rope compounds, and gear shields, are usually heated before application. Type I of VV-L-751 has no rust-preventive properties, and may be used only as an emergency substitute. Type II, which has rust inhibiting characteristics, is preferred for use in naval ordnance systems. Properties of the three grades under Type II are shown in table 3.6.

3.3.2.5 Insulating Oil for Electrical Equipment, Specification VV-I-530. This oil is

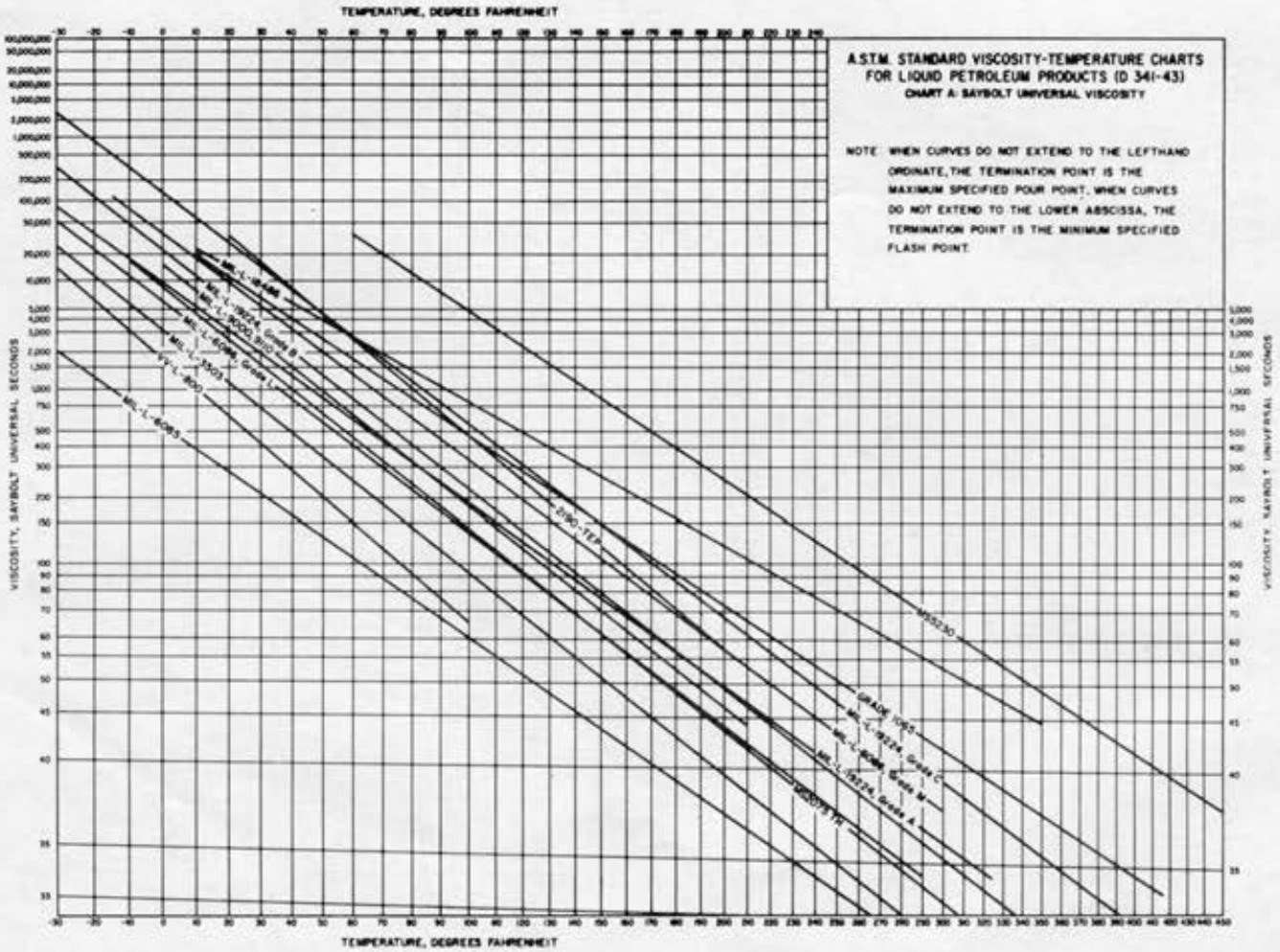

Figure 3.15 - Viscosity-Temperature Relations for Typical Lubricating Oils

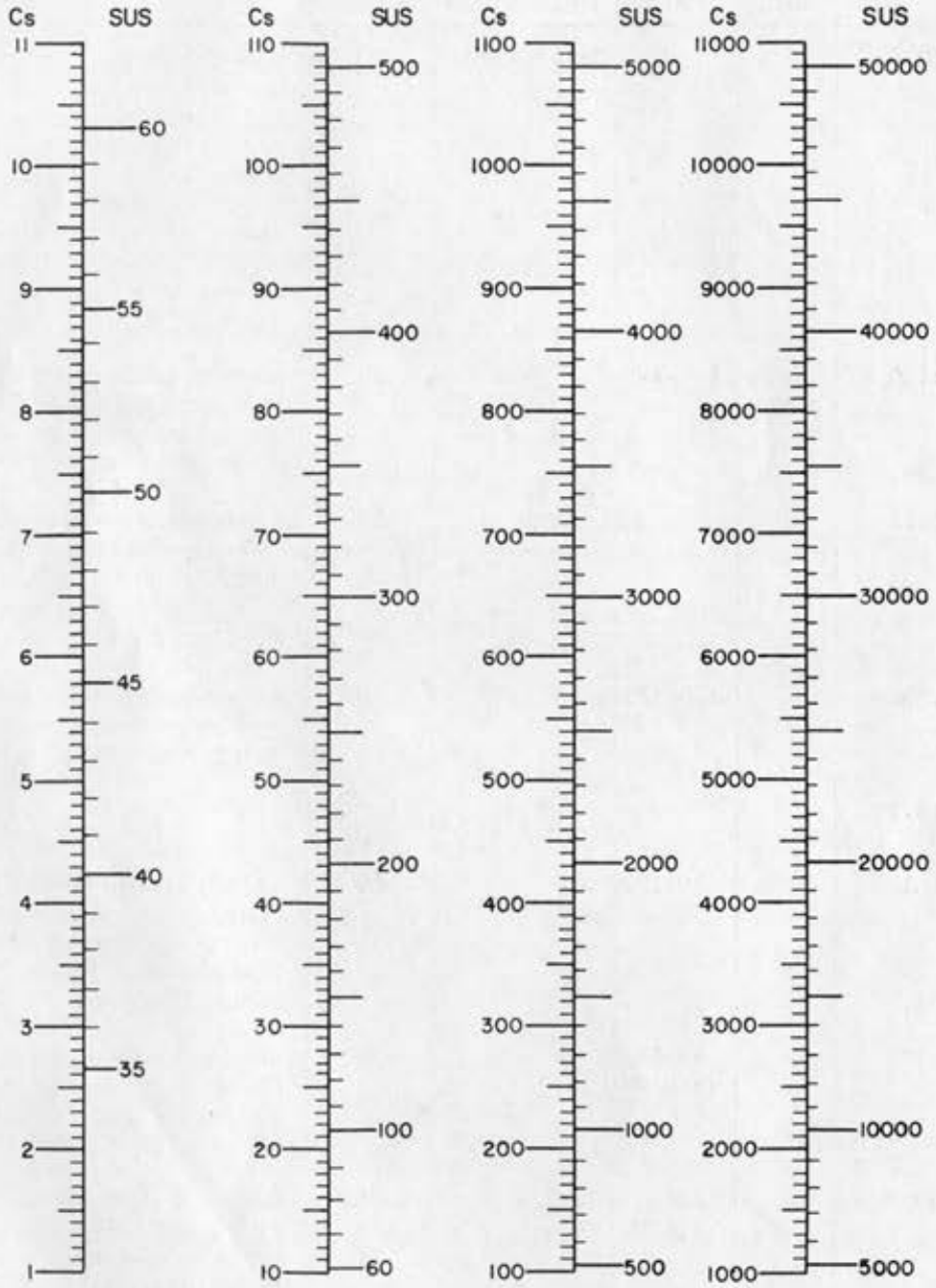

Figure 3.16 - Viscosity Conversion Chart, Centistokes (Cs) to Saybolt Universal Seconds (SUS)

Table 3.4 - Properties and Principal Uses of Petroleum Oils Containing Corrosion Inhibitors

SPECIFICATION	VISCOSITY			POUR POINT MAX °F	PRINCIPAL USES
	Cs 100°F MIN.	SUS 130°F	Cs MAX. AT TEMP. INDICATED		
VV-L-800	12	-	7000 (-40°F)	-70	General purpose, preservative, is intended for use in the lubrication and protection against corrosion of certain small arms and automatic weapons and whenever a general purpose, water displacing, low temperature lubricating oil is required. Oil should not be used if temperature is lower than -40°F. Fuze Lubricant.
MIL-L-3150	-	185-225	-	20	Medium preservative lubricant for machine guns and other equipment; for long-term storage when properly packaged and packed.
MIL-L-3503	18	-	650 (0°F)	-50	Preservative lubricant, used on .30 cal, .50 cal, 20 mm and 40 mm AA machine guns for long-term storage when properly packaged and packed.
MIL-L-16958	-	125-135	-	0	Preservative lubricant for torpedo gyroscopes and gyroscope bearings in some range-finder stabilizers.
MIL-L-19224 (NOrd)					
Grade A	-	90-120	-	-30	Lightly loaded gears, linkages, slots, pins; response gears in turrets, gear trains with forced-feed systems; journal bearings; exposed location.
Grade B	-	45-55 (210°F)	-	-30	Medium-loaded gears, linkages, slots, pins; oil-bath lubricated, high-speed reduction gears on 5"/38 mounts, exposed location.
Grade C	-	60-70 (210°F)	-	-30	Gears, linkages, slots, pins; oil-bath lubricated train and elevation gears of 8" and 16" turrets: Moderately heavy loads, exposed location.

intended primarily for use as an insulating and cooling medium in oil-immersed transformers, switches, and circuit breakers. It is a refined petroleum base oil, free of water and other contaminants, with a maximum viscosity of 66 S.U.S. at 100°F, a pour point maximum of -40°F, and a dielectric strength of not less than 30,000 volts when tested with one-inch diameter electrodes 0.100 inch apart. For electrical purposes, there is no approved substitute for this material. Because of its low viscosity it may be used to dilute heavier petroleum oils for extreme cold weather lubrication.

3.3.3 BREECHBLOCK LUBRICANT, SPECIFICATION MIL-L-16785. This lubricant is a mixture of castor oil, specification JJJ-C-86 and MS 2135 oil, used to prevent galling of the bearing surfaces of either sliding or interrupted thread type breechblocks. The lubricant is applied by brushing or swabbing, after which the excess is removed. During continuous firing operations, the lubricant should be reapplied frequently. If not available already mixed the lubricant may be prepared for use by thoroughly mixing the ingredients in the proportions shown in table 3.7. Since the two oils are not soluble or miscible with each other the lubricant should always be well mixed immediately before use.

3.3.4 GRAPHITE-BASE LUBRICANTS. Graphite-base lubricants are composed of oils or other liquids containing colloidal graphite in suspension, and are approved only for specific applications. The graphite is an adherent lubricant which will remain on the metal for some time after the liquid has evaporated or has been burned off. The liquid used in the specification MIL-G-17745 lubricant is a synthetic oil which breaks down at high temperatures and evaporates without leaving a resinous deposit. Graphite-base lubricants approved for naval ordnance systems are:

MIL-L-3572	Lubricant, Colloidal Graphite in Oil
MIL-G-17745 (NOrd)	Graphite, Colloidal (in Polyalkylene Glycol)
MIL-G-26548	Graphite, Colloidal, Lubricant, Pressure Spray Applied

Characteristics of these lubricants are given in table 3.8.

3.3.5 SYNTHETIC OILS. These oils composed largely or entirely of synthetic materials, provide satisfactory lubrication and corrosion prevention under conditions where petroleum-base lubricants are unsuitable. It should be

Table 3.5 - Properties and Principal Uses of Gear Oils, Petroleum-Base

SPECIFICATION	VISCOSITY (SUS) 100°F	VISCOSITY (SUS) 210°F	VISCOSITY INDEX MIN	POUR POINT MAX °F	PRINCIPAL USES
MIL-L-6086					Gearing extreme pressure:
Grade L	100-165	-	80	-40	Gear trains, below -20°F
Grade M	275-325	-	80	-20	Gear trains, below -20°F
MIL-L-18486					
Grade I	750[1]	95-105	120	10	Enclosed worm gears 0°F to 150°F
Grade II	300-500	60-70	115	-20	Extreme pressure (EP) lubrication: as all-temperature gear lubricant in the train pinion housing, response gears, and front hopper frame gearing of 3"/70 twin mounts

[1] Approximate value from viscosity-temperature chart.

Table 3.6 - Characteristics and Uses of Lubricants for Chains, Exposed Gears, and Wire Rope

SPECIFICATION	VISCOSITY (SFS)[1] 210°F	POUR POINT MAX °F	SOFTENING POINT °F	PENETRATION 77°F	USES	CONDITIONS
VV-L-751 Type II						
Grade A	25-55	60			A lubricant and corrosion preventive for chains, wire ropes, and cables, after they are placed in service. Used for underwater exposure.	Cold Weather
Grade B	75-125	80			Same as Grade A	Warm Weather
Grade C	140-250	100			Same as Grade A	Hot Weather
MIL-L-22803 (WEP)	300-600 (250°F)		135-150	80-100	As a preservative and lubricant to be applied to vegetable fiber strands used in the manufacture of wire rope	
MIL-G-18458A (Ships)				200-300	To provide lubrication and corrosion protection for running wire ropes and exposed gears	

[1] Saybolt Furol Seconds

noted that some synthetic oils have a greater deteriorating effect on rubber materials, certain insulators, and organic coatings than petroleum-base oils. Before substituting synthetic lubricants for other synthetic lubricants or for petroleum-base lubricants, be certain they will not have a rapid deteriorating effect on rubber or other organic materials which the lubricant contacts. The synthetic oils listed below contain corrosion inhibitors and oxidation retardants. Characteristics and uses of these oils are given in tables 3.9 and 3.12.

MIL-L-3918	Lubricating Oil, Instrument, Jewel Bearing, non-spreading, Low Temperature
MIL-L-6085	Lubricating Oil, Aircraft Instrument, Low Volatility
MIL-L-11734	Lubricating Oil, Synthetic for Mechanical Time Fuzes

Table 3.7 - Breechblock Lubricant, MIL-L-16785

GRADE	COMPOSITION PARTS BY VOLUME		VISCOSITY (SUS) 210°F	POUR POINT MAX °F	CONDITIONS	ALTERNATE
	MS 2135	CASTOR OIL				
A	5	2	50-60	50	Summer	MS 3050 + Castor Oil
B	10	1	45-55	0	Winter	MS 3050 + Castor Oil

Table 3.8 - Properties and Principal Uses of Graphite and Molybdenum Disulfide Base Lubricants

SPECIFICATION	GRAPHITE OR MoS_2 % BY WEIGHT	VISCOSITY (SUS) 100°F	VISCOSITY (SUS) 210°F	POUR POINT MAX °F	PRINCIPAL USES
MIL-L-3572					
Grade A (Light)	2(1)	90-100	--	-50	Machine-gun housing slides, windshield wipers and other lightly-loaded sliding members exposed to normal and cold temperatures.
Grade B (Medium)	10(1)	110-135	--	15	Gear trains of hot-running torpedoes.
Grade C (Heavy)	10(1)	--	275 Min.	15	Medium or heavy-duty gun slides.
MIL-G-17745					
Grade A (Light)	5(1)	--	70-100	-30	Light and medium loaded components of rocket launchers: -200 to 800°F.
Grade B (Heavy)	5(1)	--	250-350	-20	Gun slide liners, guides, spring guides and housing guides: heavy loads.
MIL-G-26548	.8(1)	--	--	--	High speed sliding motion applications at temperatures of -65°F to 700°F.
MIL-L-25681B (ASG)	50(2)	300-395	79-95	--	Use on slow speed sliding surfaces operating at temperatures to 750°F and for use as an antiseize compound on threaded parts which operate at temperatures to 1400°F. This material should not be used on antifriction bearings under any circumstances.

NOTES:
(1) Graphite
(2) Molybdenum Disulfide (MoS_2)

Table 3.9 - Properties and Principal Uses of Synthetic Oils

SPECIFICATION	VISCOSITY (Cs)		POUR POINT MAX °F	PRINCIPAL USES
	100°F	MAX AT °F SHOWN		
MIL-L-3918	9.5-10.5	--	-40	Jewel bearings in chronometers, watch and clock mechanisms, meters, instruments; low temperature, nonspreading.
MIL-L-6085	8 Min. (130°F)	12,000 (-65)	-70	Fire-control equipment containing synchros, computing mechanisms, control devices, and other lightly-loaded equipment; for optical equipment, precision bearings, gears, and sliding surfaces over a wide temperature range where loads are moderate; for some gyro-rotor bearings and gun sights. Low temperature, low volatility. Does not fog optical elements by condensation.
MIL-L-11734	12.5 ± 1.0	15,000 (-70°)	-80	Mechanical time fuzes, -65° to 125°F

3.3.6 GREASES

3.3.6.1 General Information. Lubricating greases are used in applications where the use of fluid lubricants is not feasible. In cases where space and weight limitations exclude the use of lubricant reservoirs, a suitable lubricating grease will provide the necessary extended lubrication due to its retention properties. Further, in applications where fluid tight seals are not possible, lubricating greases will form a seal and provide protection against contaminants. This sealing is of special importance in bearings which operate in either wet or dirty areas. Lubricating greases are also used to replace fluid lubricants when the part to be lubricated is not accessible. Often, in such cases, the quantity of grease in a bearing is expected to provide lubrication for a long period. The consistency, plasticity, texture, flow characteristics under pressure, and other properties of a lubricating grease depend on the types and proportions of fluids, thickening agents and processing techniques.

3.3.6.1.1 Fluid Components. Greases are mixtures of lubricating fluids and suitable thickening agents. The fluids may be petroleum-base, synthetic, or mixtures of these. Lubricating grease with synthetic oils are used in applications where the requirements are such that petroleum oils are not adequate for reasons of temperature, oxidation stability, metal wear, low temperature operations, etc. Typical synthetic fluids used as lubricants include synthetic esters, fluorocarbons, silicones, and polyalkylene glycols. It should be noted that greases with synthetic fluid components may have a greater deteriorating effect on rubber materials, certain insulators, and organic coatings than those made with petroleum oils.

3.3.6.1.2 Thickeners. Soaps such as aluminum, lithium, sodium, calcium, and barium may be used as thickening agents. Greases containing lithium or sodium soaps generally have higher dropping points than those containing other soaps and are therefore more suitable for use at higher temperatures. Calcium-soap grease is used where the highest water-resistance is required. Generally, the sodium-soap greases are not water-resistant and should not be used in such applications unless the water-resistance property is controlled by the specification. Lithium-soap greases are used in many applications because of their high degree of stability over a wide temperature range and their excellent preservative properties. In order to satisfy the high-temperature requirements of some ordnance systems, nonsoap

thickeners are required. These thickeners cover a wide range of materials such as treated silica, modified clays, resins of alkyl urea type and dyes.

3.3.6.1.3 Additives and Modifiers. Most lubricating greases contain various additivies to either modify the structure, change the color, or to improve performance of the finished grease. These added agents may be antioxidants, extreme pressure agents, pour-point depressors, viscosity index improvers, rust preventives, water-resistant improvers, oiliness or lubricity materials, pigments or fillers.

3.3.6.2 Characteristics of Approved Greases. Lubricating greases approved for ordnance system use, together with their principal characteristics and uses are listed in table 3.10. Most of the greases afford protection against corrosion and may be used as preservatives as well as lubricants. Consult the specification for additional properties such as load carrying capacity, rubber swell, low temperature torque and for the special performance tests required.

3.3.6.3 Brand- or Trade-Name Lubricants (Nonstandard). A nonstandard lubricant is a lubricant procured on a brand- or trade-name basis. In accordance with MIL-STD-838A the use of nonstandard lubricants will not be approved by the procuring activity except in the following instances:

a. Potentially suitable standard lubricants have been tested by contractor or his vendor in the application and found to be inadequate for the minimum performance requirements of the equipment involved.

b. The specific part requiring the nonstandard lubricant does not require lubrication at any time during its operating life.

c. The specific part requiring the nonstandard lubricant will be relubricated only at major overhauls by either the manufacturer of the part, or by a designated commercial maintenance facility that supplies the lubricant as part of a maintenance contract. In the event that a nonstandard lubricant is proposed for use, the contractor shall furnish an adequate description of the material and submit it for approval.

3.3.7 SOLID FILM LUBRICANTS.

3.3.7.1 Conventional Solid Film Lubricants. Natural flake graphite of various particle sizes is used in lubricating such equipment as counters, locks, and other mechanisms in which an oil might tend to become gummy or cause sticking of small parts. Specification SS-G-659 for graphite covers three particle sizes, of which two, medium and small, are normally used in ordnance. Specification MIL-G-6711 covers a high-grade, powdered graphite below No. 200 sieve size, for use either for a dry lubricant or mixed with a suitable Government specified oil. Both graphite and molybdenum disulfide, specification MIL-M-7866, are used in special high-temperature applications where lubricants which vaporize or carbonize can not be tolerated. The preferred graphite-base lubricants described in paragraph 3.3.4 contain colloidal graphite which is much finer than the flake graphite of specification SS-G-659.

3.3.7.2 Improved Solid Film Lubricants. Solid film lubricants are dispersions of lubricating pigment in a fluid-binder mixture, and when applied to a metal surface and cured will result in a lubricant film of .0002-.0005 of an inch thick.

The lubricant-binder mixture is usually diluted with solvent to a spraying consistency where deposition can be effected by spraying with air or nonreactive gases from either a spray gun or an aerosol container. The lubricating pigment can be solid inorganic or organic compounds of which molybdenum disulfide, graphite and polytetrafluoroethylene are the most common. The binder systems can be thermosetting resins, air drying resins, ceramics, metal-matrix lubricant systems, silicates, phosphates, borates, etc.

The resultant combination of lubricant pigment and binder-solutions are diluted with appropriate organic or inorganic solvents, this mixture is then applied to metal surfaces by either spraying (preferred), dipping or tumbling. The solvent is then allowed to evaporate and the proper temperature/time cycle is followed to cure the binder utilized.

The processing steps for deposition of solid film lubricants are as follows:

a. Degrease (trichloroethylene or perchloroethylene)

b. Pretreatment

c. Deposition of solid film lubricant

d. Cure cycle

Table 3.10 - Properties and Principal Uses of Greases

SPECIFICATION	TYPICAL FLUID TYPE	WORKED PENETRATION	CORROSION REQUIREMENT	OPERATING RANGE (°F)	DISTINGUISHING CHARACTERISTICS	PRINCIPAL USES
VV-P-236	Petroleum		Corrosion on copper		Viscosity, 70-95 SUS at 210°F; min flash point 390°F; unworked penetration, 150°-275°; good dielectric properties; poor lubricant below 30°F	Very limited use as a lubricant. Only for very light loads.
MIL-G-4343 Grease, Pneumatic System	Silicone-di-ester	260-300	Rust-preventive properties	-65 to 200	Satisfactory for pressures up to 2,000 psi. Controlled rubber swell	Pneumatic systems as a lubricant between rubber seals and metal parts (under dynamic conditions). May be used for pressurized cabin bulkhead grommets and other mechanisms requiring rubber to metal lubrication.
MIL-G-6032 (Type 1) Grease, Plug Valve, Gasoline and Oil Resistant	A mixture of animal, vegetable, or synthetic oil, or a combination thereof	Max 310	Corrosion on steel. Corrosion on copper.	32 to 200	Resistant to fuel, oil, water, and alcohol	Tapered plug valves, gaskets, and other applications in fuel and oil systems where gasoline, oil, alcohol, and water resistance is required.
MIL-G-7711 Grease, Aircraft, General Purpose	Mineral and/or synthetic	265-340	Rust-preventive properties. Corrosion on copper.	-40 to 250	General purpose aircraft lubricant	Antifriction bearings, gear boxes and plain bearings where operation at both low and high temperature may be required.

Table 3.10 - Properties and Principal Uses of Greases (Continued)

SPECIFICATION	TYPICAL FLUID TYPE	WORKED PENETRATION	CORROSION REQUIREMENT	OPERATING RANGE (°F)	DISTINGUISHING CHARACTERISTICS	PRINCIPAL USES
MIL-G-10924 Grease, Automotive and Artillery	Mineral and/or synthetic	265-295	Rust-preventive properties. Corrosion on copper	-65 to 175	General purpose automotive and artillery lubricant	Lubrication and surface corrosion prevention of artillery equipment operating in the specified temperature range.
MIL-L-15719 Lubricating Grease (High Temperature Electric Motor, Ball and Roller Bearings)	Polymethyl-phenyl silicone	260-330	Corrosion on copper	0 to 300	Lubrication of ball and roller bearings only	For lubricating Class H insulated (silicone) electric motors with heat stabilized ball bearings.
MIL-G-18458 Grease, Wire Rope, Exposed Gear	Petroleum	200-300	Salt spray. Accelerated weathering	-20 to 150	Low temperature flexibility; resistance to weathering and salt spray corrosion	To provide lubrication and corrosion protection for running wire ropes and exposed gears.
MIL-G-18709 Grease, Ball and Roller Bearing	Petroleum	Established in qualification test	Corrosion on copper	32 to 225	Antifriction bearing lubricant operating in the specified temperature range	Motor-generator and other antifriction bearings operating at medium speeds.
MIL-L-19701 Lubricant, Aircraft Ordnance, All-weather, Semifluid	Silicone-di-ester		Rust prevention (steel)	-65 to 160	Semifluid compatible with oil-resistant rubber and capable of lubrication under chill, sweat-chill cycling conditions	The entire assembly of aircraft machine guns, associated mechanisms, and other weapons operating at low temperatures.

Table 3.10 - Properties and Principal Uses of Greases (Continued)

SPECIFICATION	TYPICAL FLUID TYPE	WORKED PENETRATION	CORROSION REQUIREMENT	OPERATING RANGE (°F)	DISTINGUISHING CHARACTERISTICS	PRINCIPAL USES
MIL-G-21164 Grease, Molybdenum Disulfide	Di-ester	260-310	Rust-preventive properties. Corrosion on copper	-65 to 250	Contains molybdenum disulfide, antiseize compound.	Accessory splines, heavily loaded sliding steel surfaces or for antifriction bearings carrying high unit loads and operating through wide temperature ranges.
MIL-G-21567 Compound, Silicone, Soft Film	Silicone	260-320	Sea-water spray	-65 to 160	Grease-like, silicone, rust-preventive compound	To protect artillery shell components from rusting and as a thread lubricant for certain bomb and fuze mechanisms.
MIL-L-22803 Lubricant, Wire Rope	Petroleum	80-100	Corrosion (zinc-coated steel)	32 to 150	Suitable for use as a preservative for vegetable fibre strands	Used in the manufacture of wire rope and in the fabrication of submarine nets.
MIL-G-23549 Grease, General Purpose	Mineral	270-315	Corrosion on copper. Salt spray	0 to 400	Non-soap thickened petroleum base grease containing MoS_2 for heavy load applications	For footpads, automotive, and ground support equipment.
MIL-G-23827 Grease, Aircraft and Instrument, Gear and Actuator Screw	Di-ester	270-310	Rust-preventive properties. Bomb copper corrosion	-100 to 260	Synthetic multipurpose aircraft grease suitable for antifriction bearings, actuators, gears in specified temperature range	Control surface and rod and bearings, cameras, electronic gear, gyros, propellers and accessory equipment. Torpedo tail bearing.

Table 3.10 - Properties and Principal Uses of Greases (Continued)

SPECIFICATION	TYPICAL FLUID TYPE	WORKED PENETRATION	CORROSION REQUIREMENT	OPERATING RANGE (°F)	DISTINGUISHING CHARACTERISTICS	PRINCIPAL USES
MIL-G-25013 Grease, Ball and Roller Bearing	Silicone	260-330	Rust-preventive properties. Corrosion on copper	-100 to 450	Suitable for anti-friction bearing lubrication at temperatures to 450°F	Engine accessory equipment exposed to high temperatures and for landing gear applications for some high performance aircraft.
MIL-G-27617 Grease, Aircraft, Fuel and Oil Resistant	Fluoro-carbon	280-340	Rust-preventive properties. Corrosion on copper	-30 to 400	Plug valve lubricant stable to liquid oxygen and resistant to fuel and oil	Used for valves, gaskets and bearings in aircraft and ground support fuel systems. Also used for some missile applications.
MIL-G-81322 Grease, Aircraft, General Purpose, Wide Temperature Range	Synthetic	265-320	Rust-preventive properties. Corrosion on copper	-65 to 350	General purpose aircraft grease (synthetic)	Alternate for MIL-G-7711 and MIL-G-23821. Also as a design selection material.

Surface preparation and pretreatment are considered extremely important to the mechanism of solid film lubrication. Surface pretreatments such as phosphating, vapor grit blasting, sand blasting and anodic coatings on metals are advantageous in strengthening the bond or adhesion of the lubricant-binder on the surface of the part to be lubricated.

The surfaces to be lubricated should also be free of grease, oil, dust, dirt and fingerprints. Lint free cotton gloves should be used in handling all parts prior to and after deposition of the lubricant.

The following military specifications covering solid film lubricants are being used by the Navy and Air Force:

a. MIL-L-8937(ASG) - Lubricant, Solid Film, Heat Cured

This lubricant is intended for use on steel, titanium, aluminum, aluminum alloys or on other metals except those materials whose properties may be adversely affected by exposure to the specific cure cycle of 300°F for one hour. It is useful where conventional lubricants are difficult to apply or retain or where other lubricants can be easily contaminated with dirt and dust. It is generally suitable for sliding motion applications such as in plain spherical bearings, flap tracks, hinges and cam surfaces.

b. MIL-L-23398A(ASG) - Lubricant, Solid Film, Air Drying

The uses for this lubricant are the same as in MIL-L-8937 except that this material which is cured by air drying at ambient temperatures may be used when it is not feasible to use the MIL-L-8937(ASG) type which requires baking at an elevated temperature.

c. MIL-L-81329(WP) - Lubricant, Solid Film, Extreme Environment

This lubricant is intended for use in extreme environments, such as temperatures ranging from -300°F to 750°F, liquid oxygen and vacuum. It can be used in space vehicles, bearing assemblies and other equipment where the environments of temperature, nuclear radiation and vacuum preclude the use of conventional lubricants and organic solid film lubricants.

3.3.8 ANTISEIZE COMPOUNDS. Antiseize compounds are normally used to prevent galling and seizing of metal surfaces brought into contact under high pressures. They contain solids such as graphite, metal oxides, white lead, and the molybdenum disulfide. Characteristics and uses of antiseize compounds approved for naval ordnance use are given in table 3.11.

Table 3.11 - Properties and Principal Uses of Antiseize Compounds

SPECIFICATION	COMPOSITION	PRINCIPAL USES
MIL-T-22361	Zinc dust and petrolatum	For aluminum and aluminum alloys.
TT-A-580A	White lead, asphalt, lubricants	Threaded fittings, to 350°F.
MIL-A-907	Graphite, MoS_2, or other solids in liquid media	Ferrous metals (except austenitic steels), to 1050°F.
MIL-T-5544	Graphite and petrolatum	Ferrous metals; thread fittings in hydraulic systems of guided missiles and their associated handling and launching equipment.
MIL-T-27730A(ASG)	At least 99 percent polytetra fluoroethylene	The tape is intended as an antiseize and sealant of pipe threads of liquid and gaseous oxygen systems of 2,000 psi and less.

3.4 SERVICE USE OF LUBRICANTS.

3.4.1 LUBRICATION INSTRUCTIONS. For proper lubrication of the various components of naval ordnance equipment such as bearings, sliding parts, linkages, and gearing, follow the lubrication charts and instructions furnished for the particular equipment or for the general type of equipment, such as fire-control instruments. These charts and instructions are revised frequently and it is important that the latest revision be used, as the OPs accompanying the equipment do not necessarily agree with the current lubrication instructions and charts. Special instructions for lubrication under extreme conditions, supplementing those contained in lubrication charts, are given in chapter 7. Examples of application of lubricants to various types of equipment are given in table 3.12.

3.4.2 LUBRICATION PROCEDURES.

3.4.2.1 Prevention of Contamination. Prevention of contamination of lubricants and fluids in naval ordnance systems equipment is of prime importance. Contamination of lubricants can seriously reduce machine output, increase power consumption and contribute to excessive maintenance expense. Foreign materials such as dirt, metal particles, and water may render equipment inoperable or cause severe wear or damage. Even minute foreign particles can effect adjustment or cause faulty operation of delicate instruments. Water and nonlubricating foreign matter can get into an oil or grease while in storage, or during the course of handling. Usually this can be attributed to careless handling of containers, having grease-drum covers off, or oil-drum bungs loose so that water or other contaminants may enter. It is equally important to keep lubricants as clean in service as during storage. In service, the handling procedure is often the controlling factor. Careless usage of portable lubricating equipment, or failure to wipe off accumulated dirt from grease fittings or from ring-oiled bearing caps can easily lead to abrasive dirt getting into the lubricant to cause bearing wear. In order to promote effective maintenance, the following pointers should be adhered to:

a. Containers of lubricants and fluids should be tightly closed when not in use and should be carefully protected against foreign materials when opened.

b. All surfaces, fittings, oil and grease caps, applicators such as grease guns, oil cans, pressure lubricators, spray guns, spatulas, and brushes should be thoroughly cleaned before using.

c. Material which is suspected of being contaminated because of its unusual appearance, unusual amount of separation of oils from the soap component in greases, or separation of insoluble additives from the parent material in oils should not be used unless tests show it to be in conformance with the requirements of the applicable specification. Small or usual amounts of separated oil observed in the grease containers may be poured off, but no attempt should be made to remix it into the bulk of the grease.

d. Workshop, shipboard location, and lubricant storage areas should be kept clean and orderly.

3.4.2.2 Application of Lubricants. Various types of oilers, fittings, pressure lubricators, filters, and equipment accessories are described in paragraph 3.2. Lubrication charts generally show the following:

a. Type of material to be used at each lubrication point.

b. Amount of lubricant, or filling level.

c. Frequency of replenishment or change.

d. Special procedures during lubrication. Changes required for cold weather operation and use of heaters.

3.4.2.3 Inspection of Lubricants. In addition to the lubrication procedures indicated in the instructions and charts for equipment, periodic inspections should be made to determine whether change or replenishment of lubricants or hydraulic fluids is required. The following conditions should be observed:

a. Fluid level.

b. Evidence of leaks, grease runout, scratched or marred parts or any imperfections of dry film coating such as cracking, blistering, flaking, etc.

c. Lubricant losses in exposed areas.

d. Contamination by grit, metal particles, dust, water and corrosion products.

e. Changes in appearance of lubricants other than mere color change.

f. Indications of excessive torque or drag in handwheels, door hinges, etc.

g. All moving parts for surplus lubricant, to prevent fouling by combination of dust, dirt, or sand with oil or grease.

h. Evidence of poor filtration, clogged filters as indicated by excessively high pressure drop across the filter or contaminated fluid.

i. Scoring of bearing surfaces or indications of metallic particles in the lubricant.

j. Overheating or noise of bearings, gears, and other moving components.

k. Evidence of willful tampering as indicated by presence of abrasives such as sand, emery, and pumice. Such materials can be detected by diluting the lubricant with cleaning solvent or gasoline and filtering.

When any of the previously observed conditions indicate the need for replacement or renewal of lubricants, the necessary corrective action should be taken immediately. If the specified materials or alternates are not available, substitutes may be used temporarily.

3.4.2.4 Packing of Ball and Roller Bearings. Prior to use, each bearing (regardless of type) should be carefully examined and any bearing showing evidence of rust, cracks, pitting, or roughness should be rejected. Sealed bearings may be presumed to be free from entrained abrasive material if they turn smoothly. The presence of corrosion, dirt, or scored surfaces of a bearing are normally noted by the feel of a bearing when turned slowly, about half a turn.

In the application of grease to ball and roller bearings, it is important that sufficient grease be applied without overpacking. When bearings operate in proximity to electrical commutators or when the operating speed of the bearing is such that excessive churning and overheating may result, the amount of grease in the bearing must be controlled, and in general should not exceed two thirds of the grease capacity of the bearing. Overpacking may cause leaking through seals, hard starting (excess torque) increased friction, etc. The volume of lubricant used in bearings can be controlled in several ways. Bearings with removable closures shall be grease lubricated before replacement of closures. Excess grease may be removed with a small metal spatula at the time of closure installation. Any method of metering in the lubricant by weight or through volume measurements is permissible, if the bearing is rotated after lubrication in order to assure complete coverage of internal bearing surfaces, and if the final volume of the grease enclosed is from one-half to two-thirds of the total internal volume. The simplest method for controlling excess lubricant is the rotation of the bearing at approximately its operating speed, using a motor-driven spindle.

In order to minimize bearing failures the following measures are recommended:

a. Storage areas must be dry and free from dust.

b. Leave bearings in shipping containers until ready for use.

c. Carefully inspect bearings prior to use.

d. No spinning of bearings before or during cleaning procedure.

e. Replace or assemble bearings carefully to avoid misalignment or overload.

3.4.2.5 Protection of Equipment Not Normally Lubricated. Exercise extreme care to prevent lubricants or other fluids from contacting optical surfaces and other items not normally lubricated. Excess lubricant should be removed from exterior surfaces. Reservoirs should be filled only to the specified levels to avoid leakage. Lubricants should not be allowed to remain in contact with rubber materials, insulation, or organic coatings unless they are the types selected as suitable for use with the materials involved, see paragraph 3.3.

3.4.3 SERVICE APPLICATIONS. Table 3.12 describes examples of service applications of the various lubricants described in paragraph 3.3. If the specified material or alternate is available, do not use any other material. Use substitutes only for temporary replacement, for emergency measures and only as a last resort, see paragraph 3.3.5. An exposed location is one which is not normally heated or fully protected from weather conditions, marine atmosphere, or raw sea water. An enclosed location is one normally heated or otherwise protected from extreme weather conditions.

Table 3.12 - Service Applications of Lubricants

APPLICATION	EXAMPLES	APPROVED MATERIALS	ALTERNATES	EMERGENCY SUBSTITUTES
Aircraft machine guns	Entire assemblies, -65° to 160°F	Chill-sweat-chill conditions: MIL-L-19701 (semi-fluid)	MIL-L-46000	MIL-G-4343B
	Mechanisms, to -70°F	Chill-sweat-chill conditions: MIL-L-19701 (semi-fluid)	MIL-L-46000	MIL-G-4343B
Aircraft machine guns	Sights and other lightly loaded mechanisms	Chill-sweat-chill conditions: MIL-L-19701 (semi-fluid)	MIL-L-46000	MIL-G-4343B
Antiseize	Threaded fittings-oxygen systems	MIL-T-27730A	MIL-G-27617	None
Antiseize	Threads control linkages	MIL-T-5544B	MIL-A-907	TT-A-580
Antiseize	Threads actuators	MIL-T-5544B	MIL-A-907	TT-A-580
Antiseize	Threaded fittings-lines for fuel, oil, alcohol, etc.	MIL-T-5544B	MIL-A-907	TT-A-580
Antiseize	Threaded fittings to 350°F	TT-A-580A	MIL-A-907	TT-A-580
Bearings, ball and roller	General	MIL-G-7711A	MIL-G-81322	MIL-G-18709
Bearings, ball and roller	Electric motor to 300°F	MIL-L-15719A	MIL-G-81322	MIL-G-18709
Bearings, ball and roller	Electric motor, greased, 0° to 250°F	MIL-G-7711A	MIL-G-81322	MIL-G-18709
Bearings, ball and roller	Motor-Generator, 125° to 200°F	MIL-G-18709A	MIL-G-711A	MIL-G-81322
Bearings, ball and roller	Oil-lubricated motor; shaft on 5"/38 elevating telescope drive and cross-shaft	Exposed location: MIL-L-19224 (NORD) Grade B (oil)	MS 3050	MS 2135
Bearings, ball and roller	Oil-lubricated motor and shaft	Enclosed location: MS 3050 (oil) alternate: MIL-L-19224 (NORD) Grade B (oil)	MS 2135	None

Table 3.12 - Service Applications of Lubricants (Continued)

APPLICATION	EXAMPLES	APPROVED MATERIALS	ALTERNATES	EMERGENCY SUBSTITUTES
Bearings, ball and roller	Torpedo gyro	MIL-L-16958A (oil)	None	None
Bearings, ball and roller	Instrument: synchro rotor, fire-control shaft	Oiled: MIL-L-6085A Greased: MIL-G-23827A	None MIL-G-81322	VV-L-800 MIL-G-7711A
Bearings, ball and roller	High-speed, high-temperature to 300°F	MIL-G-81322	MIL-G-23827A	None
Bearings, ball and roller	Roller-path assembly; slide-trunnion; sprocket; miscellaneous shafting lubricated through fittings in the bracket or housing	MIL-G-7711A MIL-G-23549A where specified	MIL-G-81322 MIL-G-21164 re-apply often	MIL-G-18709 MIL-G-81322
Bearings, jewel	Meters, timepieces	MIL-L-3918 oil		VV-L-800
Bearings, journal plain	Greased journal, -20° to 120°F Oiled journal	MIL-G-7711A Exposed location: MIL-L-19224 (Nord) Grade A (oil) Enclosed location: MS 2075 TH (oil)	MIL-G-81322 MS 2075 TH MIL-L-19224 (NOrd) Grade A (oil)	MIL-G-18709 None MS 2075
Breechblocks and plugs	Breechblocks on 3" to 8" guns; breech plugs on 8" to 16" guns	Summer: MIL-L-16785A, Grade A (oil) Winter or cold: MIL-L-16785A, Grade B (oil) Below 0°F Grade B +20% MIL-L-3503 (oil)	MS 3050 + castor oil	
Camming surfaces, grease lubricated	Firing cam on 40-mm quads; operating shaft crank and cam on rapid-fire 3"/50 mounts	MIL-G-23549A Cold weather: MIL-G-23549A (thin film)	MIL-G-21164 MIL-G-21164	MIL-G-81322 MIL-G-81322

Table 3.12 - Service Applications of Lubricants (Continued)

APPLICATION	EXAMPLES	APPROVED MATERIALS	ALTERNATES	EMERGENCY SUBSTITUTES
Oil-lubricated med. loads	Latch-retracting mechanism on Mk 108 rocket launchers (exposure to rocket blast)	MIL-G-17745 Grade B Graphite base	1 part VV-L-800 to 6 parts MIL-L-3572 Grade C	None
Oil-lubricated heavy loads	Guide latch of Rocket Launcher Mk 108 (rocket blast exposure)	MIL-L-3572 Grade C Graphite in oil	MIL-G-17745 Grade B	None
Chains, exposed heavy-duty		VV-L-751B Type II (wire rope dressing)	None	VV-L-751B Type I
		Cold weather: Grade A	None	Grade A
		Warm weather: Grade B	None	Grade B
		Hot weather: Grade C	None	Grade C
Chain links, light duty	Operating chains on breech mechanisms, 5"/38 mounts; links and pins of projectile and powder hoist chains on 5"/38 and 5"/54 mounts	Enclosed location: MS 2075 TH	MIL-L-19224 Grade A (oil)	
		Exposed location: MIL-L-19224 Grade A (oil)	MS 2075 TH	
Heavy duty	Hoist chains of Rocket Launcher Mk 108; rammer chains on 8" to 16" turrets	MIL-L-18486 (WEP) (gear oil)	MIL-L-6086 Grade M	MS 1100
Circuit breakers oil-immersed		VV-I-530 (oil)	None	None
Couplings, adjustable	Vernier type on elevating gear worm drive of 40 mm. Mount Mk 2	MIL-G-7711	MIL-G-81322	MIL-G-18709
Electrical insulation	Oil-insulated transformers, switches, and circuit breakers	VV-I-530 (oil)	None	None
Fuzes, mechanical time	Mechanical time-fuze mechanism	MIL-L-11734		VV-L-800

Table 3.12 - Service Applications of Lubricants (Continued)

APPLICATION	EXAMPLES	APPROVED MATERIALS	ALTERNATES	EMERGENCY SUBSTITUTES
Gears, light loads	Fire control instrument gears. Response gears in turrets; gear trains with forced feed lubrication	MIL-G-23827A		MIL-G-81322
		Exposed location: MIL-L-19224 (NOrd) Grade A (oil)	MS 2075 TH	
		Enclosed location: MS 2075 TH	MIL-L-19224 (NOrd) Grade A (oil)	None
	Oil-bath lubricated high-speed reduction gears on 5"/38 mounts	Exposed location: MIL-L-19224 (NOrd) Grade B (oil)	MS 3050	MS 2135
		Enclosed location: MS 3050	MIL-L-19224 (NOrd) Grade B (oil)	MS 2135
	Greased handwheel, pinion and idler gears on 5"/38 mounts; sight elevating and azimuth arcs and pinions on 3"/50 mounts	MIL-G-7711A	MIL-G-81322	MIL-G-18700
Moderate loads	Elevating worm wheel drive, 5"/38; train pinion, response gear of rapid-fire 3"/50 mounts	MIL-L-18486A (WEP) Grade 2 (gear oil)	None	MS 1065
Moderate to heavy loads	Oil-bath lubricated train and elevation gears 8" and 16" turrets	Exposed location: MIL-L-19224 (NOrd) Grade C (oil)	MS 1065	MS 2190 TEP
		Enclosed location: MS 1065 (oil)	MIL-L-19224 (NOrd) Grade (oil)	None
Heavy loads	Training worms and gearing on 5"/38 mounts; oscillating bearings of elevating gears in turrets	MIL-L-18486A (WEP) Grade 1 (gear oil) Cold weather: MIL-L-18486A (WEP) Grade 2 or MIL-L-6086 Grade L (gear oil)	None	MS 1100

Table 3.12 - Service Applications of Lubricants (Continued)

APPLICATION	EXAMPLES	APPROVED MATERIALS	ALTERNATES	EMERGENCY SUBSTITUTES
Extreme pressure	Heavy-duty elevating arcs, training circles, pinion and worms on gun mounts and directors	MIL-G-23549	MIL-G-21164	MIL-G-81322
	Gear trains, below -20°F	Enclosed location: MIL-L-6086B Grade L (gear oil)	--	MS 1065
	Gear trains, above -20°F	MIL-L-6086 Grade M (gear oil)	None	MS 1100
Gear trains, torpedo guides, guide slots, gun slides and housing guides	Hot-running torpedoes. See gun slides. See slots.	MIL-L-3572 Grade B (graphite in oil)	None	None
Light loads	Machine-gun housing guides; breech housing on 40 mm AA mounts	MIL-L-3572 Grade A (graphite in oil)	1 part MIL-L-3572 Grade B to 5 parts MIL-L-3503	None
	Sliding surfaces of .30 cal and .50 cal machine guns, pistols, rifles	VV-L-800 (oil)	MIL-L-3503	None
Heavy loads	Sliding surfaces on 6" to 16" turrets, non-rapid-fire 3"/70 mounts; counterrecoil spring guides and sliding surfaces on 3"/50, 5"/25 (dry), 5"/38, and 5"/54 mounts	MIL-L-3572 Grade C (graphite in oil) Cold weather on open mounts: MIL-G-17745 Grade B (graphite base)	MIL-G-17745 Grade B 1 part VV-L-800 to 6 parts MIL-L-3572 Grade C	None
	Counterrecoil spring guides and sliding surfaces of rapid-fire 3"/50 open mounts	MIL-G-17745 Grade B (graphite base)	1 part VV-L-800 to 6 parts MIL-L-3572 Grade C	None
Launcher components. High temperature. Light to medium loads	Feed trip-latch retracting linkages on Rocket	MIL-G-17745 Grade A (graphite base)	1 part VV-L-800 to 3 parts	None

Table 3.12 - Service Applications of Lubricants (Continued)

APPLICATION	EXAMPLES	APPROVED MATERIALS	ALTERNATES	EMERGENCY SUBSTITUTES
	Launcher Mk 108		MIL-L-3572 Grade C	
Heavy loads	Trip-latching lever pivot bearings on Rocket Launcher Mk 108	MIL-G-17745 Grade B (graphite base)	1 part VV-L-800 to 6 parts MIL-L-3572 Grade C	None
Linkages, greased	Linkages with grease fittings	MIL-G-7711A	MIL-G-81322	MIL-G-18709
Oiled	Linkages, oil-lubricated	Exposed location: MIL-L-19224 (NOrd) Grade A (oil) Enclosed location: MS 2075 TH (oil)	MS 2075 TH	
Links	See chain links			
Motors	See bearings			
Pins and plungers	Linkage pins, detents, locking plungers with close fitting springs, oil-lubricated	Exposed location: MIL-L-19224 (NOrd) Grade A (oil) Enclosed location: MS 2075 TH	MS 2075 TH	
Preservative oils	Instrument bearings	MIL-L-6085A (oil)	None	VV-L-800
	Machine guns	MIL-L-3503 (oil)	MIL-L-3150A	None
	Medium preservative oil	MIL-L-3150	MIL-L-3503	None
	Gears	MIL-L-19224 (oil)	None	None
	Special low temperature	VV-L-800 (oil)	None	None
Preservative greases	Antifriction and general purpose bearings	MIL-G-7711A	MIL-G-81322	MIL-G-18709
Projectile rings	16" turrets	MIL-G-23549A	MIL-G-21164	MIL-G-81322
Racks and pinions heavy loads	16" turrets	MIL-G-23549A	MIL-G-21164	MIL-G-81322

Table 3.12 - Service Applications of Lubricants (Continued)

APPLICATION	EXAMPLES	APPROVED MATERIALS	ALTERNATES	EMERGENCY SUBSTITUTES
Slots	Guide slots on projectile hoist sliding doors 8" turrets	Exposed location: MIL-L-19224 (NOrd) Grade B (oil)	MS 3050	MS 2135
		Enclosed location: MS 3050	MS 2135	None
Small arms switches, oil-immersed	Sliding surfaces on small arms	VV-L-800 (oil)	MIL-L-3503	None
	Oil-insulated electrical switches	VV-I-530	None	None
Tail bearings	Torpedo tail bearings	MIL-G-23827	MIL-G-81322	
Transformers; universal joints	Oil-insulated transformers, greased journal bearing type:	VV-I-530 (oil)	None	None
	16" sights, elevating gear and antenna mount; needle bearing type; 5"/38 twin-mount elevating gear	MIL-G-7711	MIL-G-81322	MIL-G-18709
	Oiled journal bearing type: 8" elevating gear, over 300 rpm	Exposed location: MIL-L-19224 (NOrd) Grade B (oil)	MS 3050	MS 2135
		Enclosed location: MS 3050 (oil)	MS 2135	None
		MIL-L-19224 (NOrd) Grade A (oil), coated with MIL-G-7711A enclosed in a boot		
Water pumps	Cooling or deicing systems	MIL-G-10924	None	None
Wire ropes, heavy duty	Hoists	Exposed location: VV-L-751B, type II (wire rope dressing)		VV-L-751B Type I
		Cold weather: Grade A	None	Grade A
		Warm weather: Grade B	None	Grade B
		Hot weather: Grade C	None	Grade C

Chapter 4

FLUIDS FOR HYDRAULIC SYSTEMS

4.1 POWER-TRANSMISSION (HYDRAULIC) SYSTEMS AND FLUIDS.

4.1.1 SYSTEMS. Liquids are capable of transmitting power and amplifying the applied force in a pressure system. The power is transmitted by a liquid acting in a system of pumps and pipes containing control devices such as orifices, regulators, and valves. Filters, which are necessary to remove contaminants from the fluid, are also part of the hydraulic system. The system is also provided with suitable gages, necessary accumulators, main tanks, and replenishing tanks equipped with fittings to allow for filling and draining of the hydraulic fluid. Filters and fittings are discussed under lubrication equipment in chapter 3.

Electrohydraulic power-transmission systems and hydraulic mechanisms and controls associated with these systems are used in naval ordnance. Typical examples are the elevation and train mechanisms of turrets, gun mounts, gun directors, missile-guidance and launching systems, and the stroking mechanisms of hoists, rammers, aircraft landing gears, and other ammunition handling equipment.

4.1.2 FLUIDS. Because of their properties, certain fluids are used preferably as a power-transmission media in naval ordnance equipment. The fluids specified by the Naval Ordnance Systems Command for use in hydraulic power and control systems are currently of the petroleum-base type, containing additives to improve certain characteristics of their chemical and physical properties.

Table 4.1 gives the pertinent chemical and physical properties of these fluids. For more detailed information on these materials, refer to the applicable specifications. Table 3.1 gives target symbols as they appear on lubrication charts for various oils used as lubricants as well as power-transmission fluids. Table 2.1 gives the current stock numbers and container sizes for hydraulic fluids approved by the Naval Ordnance Systems Command.

Instructions which accompany the various types of equipment and specify the proper hydraulic fluid should be observed wherever possible. The following paragraphs are not intended to replace such instructions, but to serve as a guide for the selection and use of the proper fluid and as an aid in selecting substitute fluids for use under emergency conditions.

4.1.2.1 Approved Fluids, Alternate and Substitutes. Fluid MIL-F-17111 (NOrd) is the power-transmission fluid generally approved for naval ordnance equipment, except guided missiles. Substitutes in order of preference are oil MIL-L-15016, MS 2110 and oil MIL-L-15016, MS 3050.

It will be noted in table 4.1 that MIL-L-15016, MS 2110 oil differs considerably from hydraulic fluid MIL-F-17111 (NOrd), particularly in the operating range. MS 2110 and MS 3050 oils should be used as substitutes only when MIL-F-17111 (NOrd) fluids are not available. It is preferable to retain the hydraulic fluids already in the system and merely add the necessary quantity of the substitute oils than to use a complete fill of the substitute since both oils are compatible. Systems containing any MS oils as substitutes should be thoroughly drained and the system refilled with MIL-F-17111 (NOrd) fluid as soon as possible. See paragraph 4.1.2.10.1 for filtering procedures before filling.

CAUTION

Except in extreme emergencies, do not use Lubricating Oil, Hydraulic, MIL-L-17672, since MS 2110 TH oil is not included in the list of approved fluids or substitutes, and mixing it with any of the fluids containing other additives is not permitted because of possible sludging. If used in extreme emergency, MIL-L-17672, MS 2110 TH, oil must be completely drained and the system flushed before refilling with MIL-F-17111 (NOrd) fluid.

Hydraulic fluid MIL-H-5606 is specified for use in some missile guidance and control mechanisms. For guided-missile handling

Table 4.1 - Properties of Power-Transmission (Hydraulic) Fluids

PROPERTY	MIL-F-17111 (NOrd)	MIL-H-5606	MIL-L-15016 MS 2110	MIL-L-15016 MS 3050
Viscosity:				
Centistokes:				
Max, -40°F		500		
Max, -25°F	600			
Max, 0°F	215		1800[1]	
Min, 100°F	27		35.2[1]	
Min, 130°F		10	18.15-25.20	
Min, 210°F	10			5.75-8.77
Working range, °F:				
Low	20	-65	55	20
High	195	275	165	200
Pour point, max, °F	-40	-75	0	0
Flash point, min, °F	220	200	325	390
Aniline point	174[1]		217[1]	--
Aniline point change, °F	0.5[1]		7.5[1]	--
Rust prevention	No corrosion	No corrosion	Extreme corrosion	Extreme corrosion
Test for corrosion and resistance to oxidation (in presence of water and copper at 200°F, min).	336-hr test	See applicable test paragraph of specification.	--	--
Loss in weight of copper, Mg per sq cm, max.	0.2	"	0.99[1]	0.99[1]
Appearance of copper after test:	Slight stain	"	Etched[1]	Etched[1]
Change in viscosity, %	0 to +25 (at 210° and 0°F)	"	50 (at 100°F)	50 (at 100°F)
Neutralization number:				
Before test, max	0.3	See applicable test paragraph of specification.	0.1[1]	0.1[1]
After test, max	0.5		8.4[1]	8.4[1]
ASTM union color:				
Before test, max	2	"	2[1]	2[1]
After test, max	5	"	8[1]	8[1]
Pump test (100 hrs)				
Loss in weight, gm				
Steel gear, max	0.020	"	0.010[1]	0.010[1]
Bronze bushing, max	0.040	"	0.004	0.004
Decrease in pumping capacity, % max.	5	"	0[1]	0[1]
Decrease in viscosity, Cs at 100°F	12.5[1]	"	0.0[1]	0.0[1]

[1] Denotes representative test results, not specification requirements.

equipment, various fluids are used and the specification applicable to the particular equipment should be referenced.

4.1.2.2 Performance and Uses. The fluids discussed in paragraph 4.1.2.1 will perform satisfactorily in all systems, throughout the temperature ranges given in table 4.1.

Fluid MIL-F-17111 (NOrd) is specified as the power-transmission medium in systems which are subjected to a wide range of operating temperatures. Normally, the highest operating temperature of the fluid should not exceed 190°F. Exercising of the system for 15 minutes prior to service operation will generally result in improved operation under cold

weather conditions. With such exercising, this fluid can be used at temperatures as low as -20°F.

4.1.2.3 Characteristics. The fluids discussed in paragraph 4.1.2.1 are refined petroleum oils or blends of refined petroleum oils containing additives to inhibit corrosion and oxidation, to improve viscosity index, and to enhance wear-resistant properties. The additives in fluid MIL-F-17111 (NOrd) remain uniformly distributed at all temperatures from the pour point to 250°F.

Power-transmission fluids must be chemically stable and nonfoaming. They must have a high viscosity index, adequate lubricating properties, a low pour point, good heat-transfer properties, and low compressibility. They must have no harmful effects on and not be affected by the metal parts of the system. They must be compatible with and have minimum chemical effect on the organic materials used for packings, seals, and gaskets.

4.1.2.4 Leakage. Power-transmission fluids have a tendency to leak through small openings or scratches. To minimize leakage, the machined parts of hydraulic systems must have a smooth finish. Much work has been done to improve the quality of seals, flanges, and fittings. Despite these improvements, hydraulic systems require careful assembly and maintenance to prevent leakage resulting from the scoring or burning of pistons, plungers, and cylinders, or from the loosening of flanges and fittings through vibration.

4.1.2.5 Corrosion Prevention. Power-transmission fluids must contain corrosion inhibitors to protect metal parts from water. The inhibitors are not efficient corrosion preventives for long-term storage, and they provide only temporary protection in drained systems where only a thin film of fluid remains.

4.1.2.6 Lubrication. The approved fluids with antiwear additives have lubricating properties adequate to prevent wear in well-designed hydraulic systems, but they are not intended for use as lubricants and are not to be used as general-purpose lubricating oils.

4.1.2.7 Evaporation. The approved hydraulic fluids do not evaporate appreciably when exposed to air at normal ambient temperatures, but the light petroleum constituents may be lost when a thin film is exposed to air at elevated temperatures. The stick residue remaining is readily soluble in MIL-F-17111 (NOrd) or in any light petroleum oil.

4.1.2.8 Effect on Cadmium and Zinc Plating. Do not use cadmium-plated parts in hydraulic systems since cadmium is readily attacked by most hydraulic fluids in the presence of moisture. Also, the cadmium acts as a catalyst to accelerate oxidation of the oil. Zinc plating, used in lieu of cadmium plating is also attacked by the fluids, but not as readily. Unlike cadmium, zinc does not accelerate oxidation of the oil.

4.1.2.9 Packings and Other Nonmetallic Components. Since aromatic compounds injure some kinds of rubber, the quantity of aromatics in approved fluids is controlled by formulation from base stocks with minimum aniline points. See the applicable fluid specification. To minimize injurious effects, packings and other nonmetallic components should be made of oil-resistant materials wherever practicable.

4.1.2.10 Cleanliness. Maintaining cleanliness in the installation and maintenance of hydraulic power-transmission systems and their interconnected hydraulic controls extends satisfactory operation of the equipment. For optimum performance, the systems must be substantially free of contaminants such as water, dirt, insoluble products resulting from oxidation of the hydraulic fluids, corrosion products, and metal particles. Presence of these contaminants may cause damage to the working surfaces, sticking of operating components, or clogging of the filters, resulting in erratic performance of the equipment or complete failure to operate.

Water may enter the systems by condensation of moisture from the air or as rain or spray entering through insecure filler caps, plugs, or cover and inspection plates. Water is especially harmful when the systems are inactive. In the bottom of expansion tanks and at low points in the systems it will corrode metal surfaces including those with electrodeposited coatings. It also decreases the lubricating efficiency of the fluids and reacts with the additives contained in the fluids to form insoluble precipitates which give the fluids a slightly milky-white or cloudy appearance.

Corrosion or precipitation products can form sludge on the surfaces of the internal components of the systems, causing them to stick and clog the filters in the systems. To prevent these harmful effects, it is essential that the specific instructions for maintenance

and cleaning of the equipment be followed. Filters and accessory equipment for cleaning power-transmission fluids are discussed under lubrication devices in chapter 3.

4.1.2.10.1 Filtering. Before filling a hydraulic system or replacing fluid after flushing, the fluid to be placed in the system shall first be strained through a No. 200 (74 micron) sieve or preferably a finer sieve, No. 400 (37 micron) to remove the coarser particles which may be present. In addition, it is recommended that the fluid be pumped through the portable filter described in paragraph 3.2.2.3 especially for hydraulic equipment containing servo or other systems having valves or other controls with close tolerance parts. Care should be taken to use the proper filter element to prevent the removal of additives, see paragraph 3.2.1.3.1. Where micronic type filters are specified for the equipment, Specification MIL-H-18766 (a 10 micron filter element) may be used provided it does not remove additives.

4.1.2.11 Flushing of Hydraulic Power-Transmission Systems. Power-transmission systems and their interconnected hydraulic controls in active service should be flushed and refilled with new hydraulic fluid whenever any of the following conditions exist:

a. The neutralization number of the fluid exceeds 0.5, indicating the fluid has oxidized and become so acid that it is no longer suitable for use.

b. Examination of contaminants removed from filters and low points in the system reveals the presence of corrosion or an excess of metal particles.

c. Insoluble precipitates produced by the reaction of water with the additives or by the oxidation of the fluids are formed at a rate which necessitates cleaning the filters at intervals of less than one week.

d. New or repaired components are placed in the system.

Any of the approved fluids of table 4.1 may be used for flushing. In the interest of economy, however, either used or reclaimed fluids should be utilized for flushing, provided they are clear and free from water and insoluble contaminants and do not contain acid resulting from oxidation.

CAUTION

Diesel fuel oil shall not be used for flushing hydraulic systems in active service, owing to its poor lubricating properties and its contaminating effect on the subsequent fill of hydraulic fluid. Diesel fuel oil may be used to remove preservatives during reactivation after storage. See paragraph 5.1.4.14.

While being flushed with an approved hydraulic fluid, hydraulic systems can be operated at full load to raise the temperature of the fluid. Immediately following the warming operation, the system should be drained by opening all drain outlets and disconnecting the hydraulic lines to remove as much of the flushing medium as possible. All filter elements, screens and chambers should be cleaned with new fluid prior to refilling the system.

CAUTION

The system should not be operated during, or after draining the fluid.

Power-transmission systems and their interconnected hydraulic controls whose inner surfaces have been inactivated and treated with a corrosion preventive or preservative compound must be flushed to remove the compound. The latest current instructions for flushing and other operations required to reactivate a particular system must be strictly followed to prevent damage.

Hydraulic fluid which has been contaminated by continuous use in hydraulic equipment or has been expended as a flushing medium must not be used again; but, should be discarded in accordance with prevailing regulations.

WARNING

Never permit high-pressure air to be in direct contact with petroleum or petroleum-base fluids in a closed system because of the danger of ignition. If gas pressure is needed in a closed system, nitrogen or some other inert gas should be used.

4.2 BUFFER, RECOIL, COUNTERRECOIL, AND DAMPING SYSTEMS AND FLUIDS.

4.2.1 SYSTEMS. Impacts are cushioned with

a cylinder and piston system in which the liquid flows through an orifice at a rate determined by the size of the orifice and the pressure exerted on the piston. This method of cushioning impacts is utilized in various types of buffers and recoil mechanisms.

4.2.1.1 Buffer. A buffer is a device for arresting or retarding moving bodies, to prevent or cushion impacts, and to control rebound. Hydraulic buffers act on the same principle as recoil mechanisms, but the rate of braking generally is not controlled as closely. Usually the orifice or opening in the cylinder is merely the clearance between the piston and the bore of the cylinder.

4.2.1.2 Recoil. A recoil mechanism is an assembly which moderates a reaction such as the force exerted by a gun when it is fired, by dissipating the energy through a planned distance of travel with respect to the supporting structure.

The hydraulic action of the recoil mechanism follows the law of dynamics which states "The weight of liquid expelled through a given orifice in a given time is proportional to the square root of the hydraulic pressure by which it is expelled." At the high velocities reached in the orifice, the effect of viscosity is insignificant and the action depends mainly on the inertia of the fluid. Because the change in density of recoil fluids is negligible with respect to change in temperature, satisfactory operation can be obtained throughout the range of operating temperatures.

The specific fluids which are specified for use are chosen for their density characteristics, and only these fluids may be used.

4.2.1.3 Counterrecoil. A counterrecoil mechanism is an assembly which returns a device such as a gun to its original position after recoil and maintains it in that position. In hydropneumatic counterrecoil mechanisms, the type generally used in naval ordnance, air under pressure is used. It is essential that air leakage be prevented in such a system. An auxiliary cylinder filled with liquid and called the differential cylinder, hydrostatically maintains the higher pressure around the main piston than the pressure in the main cylinder, thus preventing escape of air.

4.2.1.4 Recoil-Counterrecoil. A recoil-counterrecoil mechanism is a single device which performs the functions of both a recoil mechanism and a counterrecoil mechanism. The recoil mechanism is described in paragraph 4.2.1.2. Counterrecoil is obtained by means of helical springs assembled on the recoil piston rod within the hydraulic cylinder. When the device recoils, the springs are compressed, and the resultant energy stored in the compressed springs returns the device to its original position. The springs are given sufficient initial compression to hold the device in the proper position.

4.2.1.5 Damping. Sudden fluctuations and transient vibrations of indicating instruments and control devices can be damped out by immersing the indicating mechanisms in fluids of suitable viscosity. Damping devices are used to improve the stability of instruments such as meters and compasses, and of control devices such as gyroscopes, by suppressing unwanted oscillations and vibrations and thereby preventing overrun. The damping effect varies greatly with the viscosity of the damping fluid, and since viscosity varies with temperatures, the latter must be controlled within narrow limits.

4.2.2 FLUIDS. Refined petroleum oils or glycerine-water mixtures, usually containing additives to improve certain chemical and physical properties, are used as the hydraulic media in naval ordnance buffer mechanisms employed in gun mounts, directors and turrets, and the recoil and counterrecoil mechanisms of many guns.

Ester base synthetic compounds generally are used as damping fluids to suppress unwanted oscillations and vibrations or to prevent overrun. They are selected on the basis of the viscosity suitable for a particular instrument or control device.

Table 4.2 lists the pertinent characteristics, uses, and permissible substitutes for these fluids. Refer to the applicable specifications for more detailed information on these materials. Table 2.1 gives the current stock numbers and container sizes for fluids approved by the Naval Ordnance Systems Command.

4.2.2.1 Approved Fluids, Alternates, and Substitutes. There are no alternates for the approved fluids; however, the use of certain substitutes is permissible under specified conditions given in table 4.2 and in the following paragraphs.

Table 4.2 - Buffer, Recoil, and Damping Fluids - Characteristics, Uses, and Substitutes

SPECIFICATION NUMBER	CHARACTERISTICS	PRINCIPAL USES	ALTERNATES
VV-I-530	Light petroleum oil; viscosity 66 SUS max at 100°F; pour point, -40°F, max	Recoil cylinders of light machine guns.	MS 2075 TH above 30°F, MIL-L-3503 below 30°F
MIL-H-5606B	Hydraulic Fluid, petroleum base; viscosity 10 Cs, min at 130°F, pour point -75°F max 500 Cs min at -40°F, flash point, 200°F	Buffer fluid for .50 cal Browning machine guns, shock absorbers.	None
MIL-L-17672 (MS 2075 TH)	Petroleum oil; viscosity 70-90 SUS at 130°F; pour point, -10°F max; flash point, 315°F min	Hydropneumatic counterrecoil systems of certain cal housings and all major cal slides: specified buffers.	MS 2110, emergency substitute above 0°F, MIL-L-3503; or MIL-F-17111 (NAVORDSYSCOM), emergency substitute below 0°F.
MIL-F-16929A	A damping fluid made of an ester, a polymer thickener, and an oxidation inhibitor. There are six classes having various viscosities	Damping devices of instruments and fire control devices.	None
MIL-F-17111	Fluid, power transmission; viscosity 27 Cs min at 100°F, pour point -40°F max	Specified buffers	None
MIL-G-18694 (NAVORDSYSCOM)			
Type A	A colorless 80-20 mixture of glycerine and water without a corrosion inhibitor.	Recoil mechanisms and buffers where an 80-20 mixture is specified.	None
Type B	A 60-40 mixture of glycerin and water with a corrosion inhibitor	Recoil mechanisms and buffers where a 60-40 mixture is specified	None
VV-D-001078	A dimethyl polysiloxane silicone base damping fluid having viscosities of 0.65 through 200,000 centistokes	Specified buffer	None

Specification VV-I-530 oil is the approved fluid for recoil cylinders of light machine guns. If the approved fluid is not available, MIL-L-3503 oil may be used as a substitute at ambient temperatures below 30°F and MIL-L-17672 (MS 2075 TH) oil may be used as a substitute at ambient temperatures above 30°F.

MIL-F-17111 (NOrd) oil is the approved fluid in certain specified buffers.

Hydraulic fluid MIL-H-5606 is the approved buffer fluid for .50 cal Browning machine guns and for use in Delco Remy shock absorbers found on some old-type gun directors.

MIL-L-17672 (MS 2075 TH) oil is the approved fluid for hydropneumatic counterrecoil systems and specified buffers. If the approved fluid is not available, MIL-L-15016 (MS 2110) oil may be used as an emergency substitute at ambient temperatures above 0°F, and MIL-L-3503 oil or MIL-F-17111 (NOrd) fluid may be used as emergency substitutes at ambient temperatures below 0°F.

Glycerine-water mixtures, MIL-G-18694 (NOrd) Types A and B, are the approved fluids for recoil mechanisms and buffers where these mixtures are specified. There are no approved substitutes for these applications. Table 4.3 gives the compositions of these mixtures.

Table 4.3 - Glycerine and Water Mixtures

SPECIFICATION MIL-G-18694	TYPE	
	A	B
Glycerine (% by volume)	80	60
Water (% by volume)	20	40
Sodium carbonate (oz per gal of mixture)		2.40
Sodium chromate (oz per gal of mixture)		0.14
Trisodium Phosphate (oz per gal of mixture)		0.40
Specific gravity (at 60°F)	1.206 ±0.002	1.173 ±0.002

Specification MIL-F-16929 covers six classes of approved damping fluids. The class selected depends on the particular instrument or control device in which it is to be used. There are no approved substitutes for these fluids. The classes are based on maximum viscosities, as shown in table 4.4.

Table 4.4 - Damping Fluids, MIL-F-16929

CLASS	MAXIMUM VISCOSITY (Cs AT 130°F)
a	300
b	6,500
c	42,000
d	100,000
e	180,000
f	350,000

4.2.2.2 Characteristics. Buffer fluids must be chemically inert and physically stable. They must not react with the material of the buffer. Low-viscosity-refined petroleum oils are the usual buffer fluids. For certain specified applications, glycerine-water mixtures are used.

Recoil and recoil-counterrecoil fluids should have the proper densities to meet the design requirements of the mechanisms in which they are to be used. They must also have adequate low-temperature characteristics, have no corrosive effect on other materials of the system, be stable and nonfoaming, have a high specific heat, and be inert to the packings used. Glycerine-water mixtures are used as recoil and recoil-counterrecoil fluids in many naval ordnance applications because they have lower coefficients of thermal expansion, lower compressibilities than petroleum oils, and low flammability.

Hydropneumatic fluids must have a high degree of chemical stability under conditions of high temperature and pressure, be resistant to oxidation, be noncorrosive to the metallic components of the system, and have no deleterious effects on the packings used. Certain low-viscosity refined petroleum oils are used as counterrecoil fluids, see table 4.2.

Damping fluids must be chemically stable, be inert to the materials of the system, have stable viscosity-temperature characteristics, be noncreeping, and have low volatility. Required viscosities vary from less than that of water to extremely viscous, depending upon the design of the instrument and its application. Synthetic fluids, ester-base stock thickened with polymers, having a wide range of viscosities are generally used, see table 4.4.

Chapter 5

CLEANERS AND PRESERVATIVES

5.1 CLEANING MATERIALS.

Cleaning is one of the most important steps in the preparation of unpainted surfaces for storage or for the application of protective coatings. Cleaning also is important in reconditioning contaminated and deteriorated surfaces prior to lubrication. If contaminants remain on the surfaces of equipment, the best lubricants or preservatives and the best methods of protection and preservation for standby storage may be rendered ineffective. Corrosion and contamination may cause faulty operation of the equipment or deterioration beyond reclamation.

There are various cleaning methods. Selection of a proper cleaning method depends on the following:

a. Composition of part to be cleaned

b. Nature of surface of the part

c. Complexity of construction and assembly

d. Nature of contaminants to be removed

e. Portion or area of part requiring cleaning

f. Degree and length of time of contamination

g. Availability of cleaning materials and equipment

h. Hazards involved

Table 5.1 will aid ordnance personnel in the selection of proper cleaning materials and methods. This table includes types of cleaners, specification numbers, compositions, important properties, methods of application, and principal uses. Table 2.1 gives the stock numbers to be used in obtaining the desired cleaners.

Cleaners containing solvents with low flash points are highly flammable. When cleaners of this nature are used, the precautions described in detail in paragraph 5.3.3 should be strictly observed to reduce the danger of fire or explosion.

5.1.1 ALTERNATES. When it is impossible to obtain the cleaner recommended for a specific application, certain alternates may be used. In some cases it may be necessary to use an alternate cleaner because of lack of proper facilities for using the specified cleaner. Table 5.2 contains alternates and emergency substitutes which may be used under these conditions.

5.1.2 CLEANING METHODS. Cleaning methods are classified as follows:

a. Immersion, soak or dip

b. Ultrasonic degreasing, quartz, magnetostrictive, or barium titanate transducer, used in conjunction with the immersion method

c. Immersion plus brush cleaning

d. Spray

e. Vapor, with or without immersion

f. Electrolytic; anodic or cathodic, acid or alkaline

g. Local scrubbing and swabbing

For additional details of cleaning methods, refer to Specification MIL-P-116, Preservation, Methods of, and OP 3300.

5.1.3 PRECAUTIONS. Observe the following precautions to prevent damage to equipment which has been or is to be cleaned:

a. When equipment with unpainted metal surfaces has been cleaned and dried prior to applying preservatives, do not handle except by mechanical means or by wearing clean canvas or rubber gloves. Avoid touching cleaned and dried surfaces with bare hands, as perspiration is extremely corrosive. If, under emergency conditions, it becomes necessary to handle equipment with bare hands, remove the resultant fingerprints by the method outlined in the cleaning section of this chapter.

b. Handle equipment coated with preservatives by mechanical means only. If the preservative coating is abraded, restore the affected area after handling.

Table 5.1 - Properties and Typical Uses of Cleaning Materials

SPECIFICATION	COMPOSITION	PROPERTIES	TYPE OF CLEANER	METHOD OF APPLICATION	TYPICAL USES
O-C-303 Chromic acid, technical (Chromium trioxide), and O-S-809 Sulfuric acid technical (Type I, Class II)	Chromic acid and sulfuric acid in water	Acid	Decoppering agent	Immersion (see para 5.1.4.1 for proportions)	Decoppering gun barrels
O-S-571 Sodium carbonate, anhydrous, technical	Sodium carbonate in boiling water	Alkaline	Alkali	Swab (see para 5.1.4.2 for proportions)	Cleaning and neutralizing propellant deposits in guns and gun barrels on 3-inch and larger caliber guns
O-S-598 (Type I) Sodium hydroxide, technical	Sodium hydroxide	Alkaline	Alkali	Dip or mop (see para 5.1.4.6 for proportions)	Removing paint from metal surfaces except aluminum, zinc, tin, terne, and lead
P-C-444 Cleaning compound solvent, grease emulsifying		Concentrated cleaner			
Type I	Grease solvents and emulsifying agents	Flash point 110°F, pour point 35°F	Solvent emulsion	Spray, dip, or swab (see para 5.1.4.3 for proportions)	General cleaning of painted or unpainted surfaces
Type II	Grease solvents, emulsifying agents, and phenols	Flash point 110°F, pour point 35°F	Solvent emulsion	Spray, dip, or swab (see para 5.1.4.3 for proportions)	Heavy duty cleaning of surfaces. Extreme care should be taken to avoid contact with rubber, plastics, decalcomanias, and painted surfaces

Table 5.1 - Properties and Typical Uses of Cleaning Materials (Continued)

SPECIFICATION	COMPOSITION	PROPERTIES	TYPE OF CLEANER	METHOD OF APPLICATION	TYPICAL USES
P-D-680 Dry cleaning solvent	Petroleum distillate		Solvent	Spray, dip, brush, or swab	Removing preservatives and soluble contaminants prior to fabrication or preservation
Type I		Flash point 100°F			
Type II		Flash point 138°F			
P-S-591 Soap, laundry bar	Soap and water	Soap	Soap	Dip, brush, or swab (see para 5.1.4.5 for proportions)	Cleaning plastics and rubber
TT-R-230 Remover, paint (alkali type for hot application)	Mixture of metasilicates, phosphates, resinates, soda ash, and caustic soda	Strong alkali solution	Alkali	Dip or mop	Removing paint from ferrous surfaces
VV-K-211 Kerosene	Petroleum distillate	Flash point 115°F	Solvent	Dip or brush	Softening and removing congealed lubricants under cold weather conditions; removal of oils, greases, and preservatives prior to fabrication or preservation
MIL-C-372 Cleaning compound solvent, for bore of small arms and automatic aircraft weapons	Organic soap emulsion or solution of paraffin oil, water and solvents	Flash point 100°F	Solvent emulsion	Swab	Removing light oil and corrosive residue from chambers and bores of small arms
MIL-E-463 Ethyl alcohol (for ordnance use), Grade I	95% ethyl alcohol (94.9% ethyl alcohol)	Flash point 60°F	Solvent	Dip, brush, or swab	Cleaning optical elements

Table 5.1 - Properties and Typical Uses of Cleaning Materials (Continued)

SPECIFICATION	COMPOSITION	PROPERTIES	TYPE OF CLEANER	METHOD OF APPLICATION	TYPICAL USES
MIL-M-7752 Metal cleaner silicate soap	Mixture of metasilicates, trisilicates and synthetic soap	Alkali solution	Soap	Not specified	Cleaning aluminum magnesium, zinc, tin, terne, and lead
MIL-M-10578 Metal conditioner and rust remover (phosphoric acid base)	Phosphoric acid, solvent, surface active agent, and water	Flash point 135°F	Metal conditioner and rust remover	Spray, dip, or flow-brush (see para 5.1.4.4)	(See below)
Type I (wash off)					Removing rust, light grease and oil from ferrous metal parts and conditioning metal prior to application of paints and rust-preventive compounds
Type III (inhibited)					Water displacement
MIL-L-15016 Lubricating oil, general purpose	Refined petroleum oil fraction		Solvent and flushing	Flushing by operation of equipment	Flushing contaminants from electro-hydraulic power-transmission systems prior to application of paint and rust-preventive compounds
MS 2110		Flash point 325°F, pour point 0°F			
MS 3050		Flash point 390°F, pour point 0°F			
MIL-C-15074 Corrosion preventive, fingerprint remover	Petroleum spirits water corrosion inhibitor, petroleum sulfonate wetting agent	Flash point 100°F	Solvent	Scrub or swab	Removing perspiration deposits

Table 5.1 - Properties and Typical Uses of Cleaning Materials (Continued)

SPECIFICATION	COMPOSITION	PROPERTIES	TYPE OF CLEANER	METHOD OF APPLICATION	TYPICAL USES
MIL-C-16173 Corrosion-preventive compound, solvent-cut-back cold application, Grade III	Solvent-dispersed corrosion-preventive compound	Flash point 100°F	--	Spray, dip flow, or brush	Water-displacing compound
MIL-F-16884 Fuel oil, diesel marine	Petroleum distillate		Solvent and flushing	Flushing (see para 5.1.4.14)	Flushing preservative MIL-C-16173 Grade II from inactivated electric-hydraulic systems, oil reservoirs, buffers, and recoil mechanisms prior to filling with prescribed fluid (see para 5.1.4.4)
MIL-F-17111 Fluid, power transmission	Petroleum oils and additives	Flash point 220°F, pour point -40°F	Solvent and flushing	Flushing by operation of equipment	Flushing contaminants from electric-hydraulic power-transmission systems
MIL-C-20207 Cleaning compound, solvent, grease removal, heavy duty	Organic solvents, soap and water	Flash point 180°F, pour point 10°F	Solvent	Spray, dip, brush, or swab	Removing oil, grease, tar, and some rust-preventive compound from ferrous and copper alloy surfaces

Table 5.2 - Alternate and Substitute Cleaning Compounds

SPECIFIED MATERIAL	ALTERNATE	EMERGENCY SUBSTITUTE
O-C-303 and O-S-809	None approved	None approved
O-S-571	Soap and water	
O-S-598	TT-R-230	MIL-R-7751 or P-C-111
P-C-444	MIL-C-20207	MIL-C-22543
P-D-680	MIL-F-16884	TT-T-291 Grade I
P-S-591	None approved	None approved
TT-R-230	MIL-R-7751	P-C-111
VV-K-211	P-D-680	TT-T-291 Grade I
MIL-C-372		O-S-571 in water
MIL-E-463		
Grade I	None approved	None approved
Grade II	MIL-A-6091	TT-I-735
MIL-M-7752	None approved	None approved
MIL-M-10578		
Type I	MIL-C-5410 Type II	
Type III	None approved	None approved
MIL-L-15016		
MS 2110	MIL-L-17672 MS 2075 TH	
MS 3050	MIL-L-17672 MS 2075 TH	
MIL-L-15074		MIL-C-16173, Grade III
MIL-C-16173 Grade III	None approved	None approved
MIL-F-16884	P-D-680 Type I or VV-K-211[1]	TT-T-291 Grade I
MIL-F-17111	MIL-L-15016 MS 2110 MIL-L-15016 MS 3050	MIL-F-16884
MIL-C-20207	P-C-444	P-D-680, Type I
O-T-634 Type II	O-T-620	

[1] Not to be used in hydraulic systems

c. Clean metal surfaces tend to corrode in a short time. Apply preservatives as soon as possible after cleaning. If application of preservatives is delayed, coat the metal surfaces with a preservative lubricating oil until the specified preservative can be applied.

d. Slight changes in the temperature and humidity of the surrounding air may cause condensation on metal surfaces. When applying preservatives or lubricants to metal surfaces, maintain the temperature of the surface above the dew point of the ambient atmosphere to prevent condensation and retention of water, which causes corrosion under the protective film.

e. Remove water condensed on the equipment or treat the equipment with a water-displacing compound before application of preservatives. If cleaning is performed out of doors under adverse weather conditions, shelter the operation with canvas or tarpaulins.

f. Process disassembled equipment indoors.

g. Avoid trapping cleaning materials within the equipment. Take special care to avoid contact of cleaning materials with optical surfaces, dials, electrical contacts, and painted surfaces.

h. Do not use immersion cleaning on any equipment containing nonmetallic materials, unless they will not be affected by the cleaners, or are masked for protection.

i. Do not use alkaline solutions such as those of soda ash, trisodium phosphate, or metasilicate for cleaning equipment with extremely close tolerances or highly finished surfaces.

j. Do not clean the following metals in alkaline solutions unless the solution is specified for such purposes: aluminum, aluminum alloys, zinc, tin, terne, and lead.

k. Do not use acid or alkaline solutions to clean equipment having bolted or riveted assemblies when there is a possibility of trapping cleaning solution between joined members. The solutions or their residues may cause corrosion and damage paint coatings.

l. Do not allow organic materials to remain in contact with oxidizers.

m. Prepare acid cleaning solutions accurately, as excess acid may attack copper, brass, bronze, steel, and other metals.

n. Do not allow organic solvents to remain in contact with rubber, electrical insulation, or organic coatings.

5.1.4 NOTES ON THE USE OF SPECIFIED CLEANING COMPOUNDS.

5.1.4.1 Decoppering Solution Consisting of O-C-303, Chromic Acid (Chromium Trioxide) Technical Grade, and O-S-809 Sulfuric Acid, Technical (Type I, Class II).

5.1.4.1.1 Instructions for Preparation of Decoppering Solution. Calculate the volume of the gun barrel to be decoppered and allow sufficient excess to insure complete filling. Place in a steel tank, the amount of fresh water equivalent to approximately three-fourths of the calculated volume, and add the required amounts of chromic and sulfuric acids to the water in the following proportions:

Chromium Trioxide (CrO_3) 67.0 ounces per gallon of water

Sulfuric Acid (H_2SO_4) 6.7 ounces or 0.23 pints per gallon of water

Add water to make up the required volume, and mix the whole solution thoroughly.

5.1.4.1.2 Preparation of the Gun Barrel. Remove all grease or preservative from the bore, and swab the bore with solvent P-D-680, Type I. Wipe the inside of the bore with waste and dry with air. If facilities for drying with air are not available, wipe the bore again with waste. Clean the bore surfaces with a stiff wire brush to remove surface residues such as oxides and irregular deposits of copper. After wire brushing, repeat the cleaning and drying procedure. Wire brushing facilitates the attack of the decoppering solution, thereby reducing the time required for treatment.

5.1.4.1.3 Sealing the Gun Barrel. Gun barrels may be decoppered in either the vertical or the horizontal position. The vertical position is most convenient, as it eliminates the necessity of rotating the gun barrel to get rid of air pockets. The equipment for sealing and handling a gun barrel in a vertical position consists of a sealing plug for the breech, an extension pot for the muzzle (for overflow) and a lifting clamp. A sealing plug is shown in pieces 19, 20, 29, 30, 31, and 32 of Naval Gun Factory Dwg SA 15310; an extension pot is shown in pieces 12, 13, 15, and 18 of Naval Gun Factory Dwg SA 15310; a lifting clamp is shown in BuOrd Drawing 247604. Variations of the described equipment may be used when necessary. If it is more convenient to decopper the gun barrel in a horizontal position, some modifications in the design of the sealing plug and extension pot may be necessary.

5.1.4.1.4 Decoppering Procedure. After the barrel has been cleaned and wire brushed, install the sealing plug and extension pot and place the barrel in the proper position. Fill the entire bore with decoppering solution and allow to stand with the solution in contact with the bore surfaces until all copper deposits are dissolved. The contact time depends upon the amount of deposit. As a guide to the time required, a 5-inch 38 caliber barrel with copper deposits 0.05- to 0.06-inch thick, completely filling the grooves, and 0.015- to 0.019-inch thick on the lands requires approximately eight hours for complete decoppering. Air agitation is recommended for best results and can be obtained by inserting a small steel inlet pipe

through the extension pot to within a few inches of the breech sealing plug. Force air through the pipe into the solution under sufficient pressure to provide mild agitation. If the barrel is treated in a horizontal position, insure contact of the solution with all bore surfaces by occasionally rotating the barrel.

After the solution has acted upon the copper deposit for the necessary time, drain the solution from the barrel into a steel storage tank. Use the same solution approximately five times or until it becomes fouled, then discard it. After the solution is drained and the gun barrel rinsed with clean cold water, rinse or swab the barrel with a solution containing four to six ounces of sodium hydroxide, O-S-598, per gallon of water. The sodium hydroxide rinse prevents corrosion of the exposed steel surfaces while the fixtures are being removed. After the fixtures are removed, swab the bore to remove the sodium hydroxide solution. If examination reveals appreciable amounts of copper in the barrel, repeat the treatment. Apply a light oil or a preservative to the decoppered gun barrel.

5.1.4.2 Specification O-S-571, Sodium Carbonate, Anhydrous, Technical (Soda Ash). Prior to application of this cleaner, remove all preservative and lubricant films with solvent P-D-680, Type I. Do not allow soda solution to contact adjacent mechanisms or lubricated surfaces. The soda solution is prepared in the proportions of one pound of sodium carbonate per gallon of water; this solution may be removed with clean, hot water, at least 180°F. Dry the equipment with clean wiping cloths. As this solution does not provide protection against corrosion, apply a preservative to the equipment immediately after cleaning.

5.1.4.3 P-C-444 Compound, Grease-Cleaning Solvent-Emulsion Type. Dilute this compound with mineral spirits prior to use. The degree of dilution ranges between one part of compound to nine parts of TT-T-291 Grade I and one part of compound to four parts of TT-T-291 Grade I by volume, depending on the difficulty anticipated in removing grease and other contaminants.

5.1.4.4 MIL-M-10578 Metal Conditioner and Rust Remover (Phosphoric Acid Base) and MIL-C-5410 Cleaning Compound Non-Flame-Sustaining. Compounds suitable for rust removal MIL-M-10578, Type I, and MIL-C-5410, Type II, are supplied in concentrated form and must be diluted with three volumes of water before use. The procedures for removing corrosion products using compounds MIL-M-10578, Type I and III, are the same, as follows:

a. Remove all grease and oil deposits from the surfaces, using solvent P-D-680, Type I, or vapor degreaser, such as trichlorethylene O-T-634, Type II, or O-T-620 Trichloroethane.

b. Remove loose and heavy corrosion products by mechanical methods such as wire brushing, chipping, or buffing.

c. Large surfaces are scrubbed with a brush, dipped in the cleaner. Small parts are cleaned by immersion. To remove corrosion products from deep pits, alternate wire brushing and scrubbing with the conditioner may be necessary. The duration of treatment depends upon the extent of the corrosion.

d. Care must be exercised to flush with copious amounts of water to remove excess compound.

e. After removing the corrosion products, rinse the surface with hot water, 180°F, wipe, then dry with compressed air. If the surface is sticky, rinse and dry again, because a sticky surface indicates the presence of free acid.

5.1.4.5 P-S-591, Soap, Laundry Bar. This material is mixed in the proportions of one-quarter pound of soap to one gallon of water. It is used for cleaning organic materials, particularly rubber and plastics. Do not allow equipment to remain in this mixture.

5.1.4.6 O-S-598, Type I, Sodium Hydroxide, Technical, for Cleaning Purposes. Prior to paint stripping, oil and grease must be removed with an approved solvent. Parts to be stripped of paint are immersed in the solution, which is prepared in the proportions of eight ounces of sodium hydroxide per gallon of water and maintained between 180° and 200°F. After parts are removed from this solution, all loose paint should be removed by mopping or scraping, and the parts should be rinsed thoroughly with hot water, at least 180°F.

5.1.4.7 P-D-680, Types I and II, Solvent, Dry Cleaning. After cleaning, apply lubricants or preservatives immediately as the solvent does not protect against corrosion.

5.1.4.8 VV-K-211 Kerosene, TT-T-291 (Grade 1), Thinner, Paint, Volatile Spirits (Mineral Spirits). After cleaning, apply lubricants

or preservatives as soon as possible as neither solvent affords much protection against corrosion.

5.1.4.9 MIL-C-372, Cleaner, Rifle Bore. This cleaner will remove only light oil coatings. Before using the cleaner, remove any residual coating with solvent P-D-680. Apply preservative immediately as the cleaner affords little protection against corrosion.

5.1.4.10 MIL-E-463, Grade I, Ethyl Alcohol (for Ordnance Use). After application of Grade I ethyl alcohol, dry the optical elements with a jet of clean dry air.

5.1.4.11 MIL-M-7752 (AER), Metal Cleaner, Silicate-Soap. This soap is used in a concentration of 30 grams per liter of water.

5.1.4.12 MIL-L-15016, MS 2110 and MS 3050, Lubricating Oil, General Purpose. These oils are used for flushing electric-hydraulic power-transmission systems under full-load conditions, see paragraph 4.1.2.11. If the systems contain electric-hydraulic regulators, the flushing oil should not be used for operation or test, as the design performance will not be obtained. For proper operation, the equipment should be refilled with the specified fluid.

5.1.4.13 MIL-C-15074, Compound, Corrosion-Preventive, Fingerprint Remover. Agitate the compound prior to application and clean the surface with solvent P-D-680, Type I, before and after application of fingerprint remover, then apply the preservative immediately.

5.1.4.14 MIL-F-16884 (SHIPS), Fuel Oil, Diesel (Marine). Diesel fuel oil is used for removing preservatives from hydraulic power-transmission systems, buffers and recoil mechanisms when they are reactivated after storage. When the diesel fuel is so used, the latest current instructions on flushing procedure and limitations on operation of equipment during such use must be followed to prevent damage. Only slow speed operation for very short periods is permitted. Instructions for proper replacement of the diesel fuel oil must be strictly followed to prevent contamination of the hydraulic fluid. Diesel fuel oil shall not be used in flushing glyderin-water systems, nor in hydraulic systems in active service, see paragraph 4.1.2.11.

Under special circumstances and upon due authorization, diesel fuel oil may be used for flushing hydraulic systems where extreme sludging has occurred. When so used, the above precautions shall be observed.

5.1.4.15 MIL-F-17111 (NOrd) Fluid, Power-Transmission. Power-transmission equipment can be operated under full load when flushing with this fluid.

5.1.4.16 MIL-C-20207, Cleaning Compound, Solvent, Grease Removal, Heavy Duty. After cleaning, apply lubricants or preservatives as soon as possible as the solvents in this cleaner afford no protection against corrosion.

5.1.4.17 Use of 1, 1, 1-Trichloroethane (Methyl Chloroform). It is recommended that carbon tetrachloride be replaced with inhibited 1, 1, 1-trichloroethane, methyl chloroform O-T-620 obtainable under the following stock numbers:

6810-664-0387	One gallon
6810-664-0388	Five gallon

This material is considerably less toxic, MAC 500 ppm, than carbon tetrachloride and has approximately equal cleaning ability and evaporation rate in the usual applications. Because of their solvent effect on some types of electrical insulation and varnishes, do not allow the chlorinated solvents to remain in contact with such materials any longer than necessary. Forced ventilation is required whenever this solvent is used. Under no circumstances should it be used in a confined space.

5.2 PRESERVATIVE MATERIALS.

Equipment and supplies in standby readiness should be preserved with materials which allow immediate service use. The purpose of the following paragraphs is to present information pertinent only to short-term preservation and to the preservative aspects of lubrication. Data on preservatives and methods used by the Naval Ordnance Systems Command for long-term storage are contained in OP 1105 and OP 1208.

5.2.1 Oils and Greases as Preservatives. Oils and greases used for lubrication of naval ordnance equipment must have corrosion-retarding and corrosion-inhibiting properties for protection of the equipment in a marine environment. Table 5.3, Oils and Greases as Preservatives, will aid personnel in selecting the proper materials. This table includes specification numbers, compositions, important properties, types of compounds, and principal uses. Only information on preservation

is included in this table. For detailed data on oils and greases as lubricants, refer to chapter 3. For stock numbers see table 2.1.

5.2.2 NONLUBRICATING PRESERVATIVES. Nonlubricating preservatives are employed only for preservation and are not intended for use as lubricants. Prior to the application of lubricants or hydraulic fluids, it is necessary to remove these preservative materials unless otherwise specifically permitted, as their presence would impair operation of equipment. Table 5.4, Nonlubricating Preservatives is provided to aid personnel in selecting the proper preservatives. This table includes specification numbers, compositions, important properties, types of compounds and principal uses. For stock numbers, see table 2.1.

Table 5.3 - Properties and Typical Uses of Oils and Greases as Preservatives

SPECIFICATION	COMPOSITION	PROPERTIES	TYPE OF COMPOUND	TYPICAL USES
VV-L-800 Lubricating oil, general purpose preservative (water displacing, low temperature)	Petroleum fraction and additives	Viscosity, 12 Cs at 100°F, 7000 Cs at -40°F Flash point, 275°F Pour point, -70°F	Preservative lubricating oil	Small arms, machine gun and light precision parts for short term protection. If an item is suitably encased, the oil may be used for long term protection
MIL-L-3150 Lubricating oil, preservative, medium	Petroleum fraction and inhibitor	Viscosity, 100 to 130 Cs at 100°F Pour point, 20°F	Preservative lubricating oil	Equipment aboard vessels of the reserve fleet in exposed locations with cover protection
MIL-L-3503 Lubricating oil, preservative, light	Petroleum fraction and inhibitor	Viscosity, 18 Cs at 100°F 650 Cs at 0°F Flash point, 300°F Pour point, -50°F	Preservative lubricating oil	Short term protection of sight mechanisms of 20 mm and 40 mm AA guns in exposed locations with cover protection
MIL-L-6085 Lubricating oil; instrument, aircraft, low volatility	Synthetic oils and inhibitors	Viscosity, 8 Cs at 130°F 12,000 Cs at -65°F Flash point, 365°F Pour point, -10°F	Preservative lubricating oil	Instruments, electronic equipment and other lightly loaded equipment, such as instrument gears, bearings, gyros, and synchros requiring oil lubrication
MIL-G-23827 Grease, aircraft and instrument, gear and actuator screw	Synthetic oil, gelling agent, extreme pressure and other additives	Operating range -100°F to 250°F Dropping point, 325°F	Preservative lubricating grease	Instruments, control devices and other equipment requiring grease lubrication
MIL-G-7711 Grease, general purpose	Synthetic or mineral oil gelling agent and additives	Operating range -40°F to 250°F Dropping point, 300°F	Preservative lubricating grease	Plain, ball, and roller bearings; roller paths of mounts and turrets; gun directors; and enclosed gears

Table 5.3 - Properties and Typical Uses of Oils and Greases as Preservatives (Continued)

SPECIFICATION	COMPOSITION	PROPERTIES	TYPE OF COMPOUND	TYPICAL USES
MIL-L-16958 Lubricating oil, mineral oil composition, for torpedo gyroscope	Petroleum oil and additives	Viscosity, 125-135 SUS at 100°F Flash point, 360°F Pour point, 0°F	Preservative lubricating oil	Torpedo gyroscope bearings
MIL-L-19224 Lubricating oil, mineral, preservative, minus 30°F pour	Petroleum oil corrosion inhibitors, and pour point depressant	Pour point for all grades -30°F	Preservative lubricating oil	Short term preservation of oil lubricated surfaces of equipment in exposed locations with cover protection
Grade A		Viscosity, 90 to 120 SUS at 130°F Flash point, 325°F		
Grade B		Viscosity, 45 to 55 SUS at 210°F Flash point, 390°F		
Grade C		Viscosity, 60 to 70 SUS at 210°F Flash point, 410°F		

5.2.3 SUBSTITUTES. If unable to obtain the approved preservative for a specific application, the following substitutes may be used.

SPECIFIED PRESERVATIVE	SUBSTITUTE	EMERGENCY SUBSTITUTE[1]
VV-L-800	MIL-L-3503	
MIL-L-3150	MIL-L-3503	
MIL-L-3503	VV-L-800	
MIL-L-6085		VV-L-800
MIL-G-23827	MIL-G-81322	MIL-G-7711
MIL-G-7711	MIL-G-81322	MIL-G-10924
MIL-L-16958	None approved	None approved
C-N-200	C-T-91	
O-S-588	None approved	None approved
MIL-C-11796, Class 3	None approved	
MIL-P-15159	None approved	None approved
MIL-C-16173 Grade I	MIL-C-16173 Grade IA	
Grade IA	Grade I	
Grade II	None approved	None approved
Grade III	None approved	None approved
MIL-C-18487	None approved	MIL-C-11796, Class 1
MIL-L-19224		
Grade A	None approved	None approved
Grade B	None approved	None approved
Grade C	MIL-L-3150	

[1]See paragraph 3.3.5.

5.2.4 NOTES ON THE USE OF SPECIFIED PRESERVATIVES.

5.2.4.1 C-N-200, Neat's-Foot Oil. Before application of the oil, the leather must be thoroughly cleaned and dried. When used in cold weather, heat the oil until lukewarm.

Table 5.4 - Properties and Typical Uses of Nonlubricating Preservatives

SPECIFICATION	COMPOSITION	PROPERTIES	TYPE OF COMPOUND	METHOD OF APPLICATION	TYPICAL USES
C-N-200 Neat's foot oil	Animal oil (acid-free)	Pour point, 25°F	Preservative and softener	Swab, brush, or dip, then rub into leather	Leather equipment
O-S-588 Sodium chromate, anhydrous technical	0.15% solution of sodium chromate	Corrosion inhibiting	Corrosion inhibitor	Flushing or as additive (see para 5.2.4.2 for proportions)	Flushing chambers and cylinders that use glycerine and water mixture. Added to glycerine and water mixtures as a corrosion inhibitor
MIL-C-11796 Corrosion preventive, petrolatum, hot application, Class III - soft film	Petrolatum and corrosion-preventive compound	Flash point, 350°F. Melting point 135° F	Corrosion preventive	Brush on at room temperature or apply by dipping in melted material	Antifriction bearings; machined surfaces requiring compound easily removable at room temperature.
MIL-P-15159 Preservative coating, canvas	Not specified	Flash point, 80°F	Preservative	Brush	Untreated canvas which has been exposed to weather from 18 to 24 months
MIL-C-16173 Corrosion preventive, solvent cut-back, cold application Grade I	Hard film preservative in solvent	Flash point, 100°F Melting point of nonvolatile fraction, 175°F min	Corrosion preventive	Brush, dip, or spray	Protection of gun bores exposed to outdoor weather conditions; general purpose preservation, indoor or outdoor, with or without cover, and for domestic and overseas shipment where a dry-to-touch film is required

Table 5.4 - Properties and Typical Uses of Nonlubricating Preservatives (Continued)

SPECIFICATION	COMPOSITION	PROPERTIES	TYPE OF COMPOUND	METHOD OF APPLICATION	TYPICAL USES
MIL-C-16173 (Cont'd) Grade IA	Hard film preservative in solvent	Flash point, 100°F Melting point of nonvolatile fraction, 150° to 160°F	Corrosion preventive	Brush, dip, or spray	Same uses as Grade I but affords outdoor protection for longer periods
Grade II	Soft film preservative in solvent	Flash point, 100°F	Corrosion preventive	Brush, dip, or spray	Extended protection of interior or exterior surfaces of machinery, tools, bearings, or other material under cover, with or without supplementary barrier materials; outdoor protection of material for limited periods where metal temperatures do not reach levels which produce flow of the corrosion-preventive film; thin film preservative in hydraulic systems
Grade III	Water-displacing soft film in solvent	Flash point, 100°F	See above	Brush, dip, spray, or flush	Displacement of water or salt solution from corrodible surfaces to prevent or arrest corrosion; protection of interior surfaces of machinery instruments or material under cover, for limited periods; protection of critical bare steel or phosphated

Table 5.4 - Properties and Typical Uses of Nonlubricating Preservatives (Continued)

SPECIFICATION	COMPOSITION	PROPERTIES	TYPE OF COMPOUND	METHOD OF APPLICATION	TYPICAL USES
MIL-C-16173 (Cont'd) Grade III (Cont'd)					surfaces for extended periods when packaged with satisfactory barrier materials
MIL-C-18487 Compound, gun slushing	High melting point petrolatum, wax and corrosion inhibitor	Melting point, 150° to 165°F	Corrosion preventive	Hot, by brush, dip, spray, or flow coating	Corrosion prevention for ferrous and nonferrous metals in long-term storage, indoors and outdoors; harbor nets

5.2.4.2. Federal Specification O-S-588, Sodium Chromate, Anhydrous, Technical. A solution is prepared for use by dissolving 0.2 ounce, 5.7 grams, of anhydrous sodium chromate in one gallon of fresh water, making a 0.15 percent solution. After using this solution, flush equipment with corrosion-preventive MIL-C-16173, Grade III, to displace the sodium chromate and water solution, prior to applying the prescribed preservative. Do not use petroleum solvents in the above flush-cleaning operation as they would emulsify.

5.2.4.3 MIL-C-11796, Corrosion Preventive, Petrolatum, Hot Application. Study the specification for detailed cleaning procedure prior to use of this compound.

5.2.4.4 MIL-C-15159 (NAVY), Preservative Coating, Canvas. Thirty minutes after application of this preservative, light handling of the canvas is permissible. Forty-eight hours are required for complete drying.

5.2.4.5 MIL-C-16173, Corrosion Preventive, Solvent Cutback, Cold Application.

5.2.4.5.1 Grade 1(Hard Film). This compound becomes viscous at temperatures below 20°F and should be maintained at room temperature for 24 to 48 hours prior to use and during application. Since the ingredients in this compound separate upon standing, mix thoroughly before using. Allow preservative film to dry tack-free (about four hours), before wrapping the equipment.

5.2.4.5.2 Grade 1A (Hard Film). Agitate this material thoroughly before application. Drying time is approximately 72 hours. Equipment treated with this compound may be handled without damage to the preservative film. Because abrasions in the coating are not self-healing, compound must be reapplied to affected areas.

5.2.4.5.3 Grade 2 (Soft Film). This compound becomes viscous at temperatures below 10°F and tends to separate at temperatures below 60°F. It should be maintained at room temperature for 24 to 48 hours prior to use. Before equipment is wrapped, allow the film to dry to a tacky consistency. When used in enclosed equipment, it should be force-ventilated to remove solvent vapors and prevent self-stripping.

5.2.4.5.4 Grade 3 (Soft Film, Water Displacing). This compound becomes viscous at temperatures below 0°F. Keep at room temperature for 24 to 48 hours prior to use. After using this compound, apply a specified preservative.

5.2.4.6 MIL-C-18487 (NOrd), Compound, Gun Slushing. Apply this compound hot. Control the heating thermostatically so that the temperature of the compound does not exceed 180° F. The preservative coating is built up by repeated applications. A coating of approximately 1/16 inch is adequate. When properly applied, this compound will not run off in extremely hot weather, nor crack in extremely cold weather.

5.3 SAFETY PRECAUTIONS.

The use of cleaners and preservatives often presents situations hazardous to personnel and property. The following Safety Precautions should be observed to prevent injury to personnel from the effects of toxic and corrosive substances and to avoid fire and damage to equipment.

5.3.1 ACIDS. When working with acids, be careful to avoid splashing, spilling, or spraying. In metal pickling where open tanks are used, operators should be particularly careful.

Use Pyrex glass containers for work with acids. Thick-walled glass containers should not be used in mixing acids because of their greater susceptibility to breakage than thin glass when exposed to temperature changes.

Observe the following precautions when using acids:

a. Avoid contact with eyes, skin, and clothing.

b. If acids contact the skin, wash the exposed area thoroughly with water, then rinse with water containing one percent bicarbonate of soda.

c. Do not take acids internally.

d. Prepare and use acids in well-ventilated locations. Do not inhale vapors. Avoid exposure for extended periods.

e. Use long-handled brushes.

f. Wear goggles, apron, and rubber gloves.

g. Wear a dust mask when handling or using

anhydrous acids, such as chromium trioxide.

h. Do not add water to acids. When diluting, the acid must be added to the water slowly, with constant mixing.

i. To avoid fires, be certain not to mix flammable organic material such as alcohols and other solvents with chromic acid or other oxidizers.

j. Avoid spilling, as it may cause fire or liberate dangerous gases.

k. Do not use acid-type cleaning fluids and rust removers containing flammable solvents near an open flame.

l. Set spent acids aside for reclamation, or flush them down the drain with a large quantity of water. Some acids, such as hydrofluoric acid, require careful neutralizing with an alkali before flushing down the drain.

5.3.2 ALKALIES. Observe the following precautions when handling and using alkalies:

a. Do not take alkalies internally.

b. Avoid contact with eyes, skin, and clothing.

c. If alkali contacts the skin, rinse the affected area thoroughly with water.

d. Wear goggles or face shield and rubber gloves.

e. Use cool water for dissolving heat-generating alkalies such as sodium hydroxide or potassium hydroxide.

f. To avoid violent spattering in the preparation of alkaline solutions, add strong alkalies to the water, slowly.

g. For disposal, carefully neutralize alkalies with an acid and flush down the drain with a large quantity of water.

5.3.3 ORGANIC SOLVENTS. Take every precaution to prevent contamination of the air by organic solvent vapors. Most organic solvent vapors are heavier than air, necessitating admission of fresh air at the top of the room and withdrawal of contaminated air near the deck.

In operations requiring transfer of solvent-soaked materials to drying ovens, adopt closed systems whenever possible. Examine these systems periodically for the leakage of organic solvent vapors into the room. Provide an adequate method of removing toxic vapors or gases so that the maximum allowable concentrations established by the American Conference of Governmental Industrial Hygienists are not exceeded. Maximum allowable concentrations for some of the more commonly encountered vapors or gases are:

SUBSTANCE	MAXIMUM ALLOWABLE CONCENTRATION (ppm*)
Ammonia	100
Amyl acetate	200
Benzene (benzol)	25
Carbon dioxide	5000
Carbon disulfide	20
Carbon monoxide	100
Carbon tetrachloride	25
Chlorine	1
Ethyl alcohol	1000
Gasoline	500
Methyl alcohol	200
Perchlorethylene	200
Trichlorethylene	100

While working with organic solvents in deep or nearly closed tanks, such as vapor degreasing tanks, remove vapors in accordance with the recommendations of the manufacturer for the particular equipment used.

Under no circumstances should organic solvents be heated unless it is so stipulated in instructions or specifications, as the vapors may be flammable or highly toxic. When use of heat is permitted, as in some degreasing baths, supply the heat with thermostatically controlled steam or hot water coils and provide adequate ventilation. Never use open flame or exposed electrical heaters to heat organic solvents.

5.3.3.1 Precautions Against Fire. To prevent or reduce fire hazards, observe the following precautions:

a. Ground metal objects in accordance with approved safety regulations.

*Parts of vapor or gas per million parts of air, by volume.

b. Prohibit smoking in areas where organic solvents are being used.

c. Keep organic solvents away from heat and open flame.

d. Adequately ventilate areas in which organic solvents are being used to prevent explosive air-vapor mixtures.

e. Do not allow any person in the area where organic solvents are being used to have in his possession, matches, lighters, or any material which may cause sparking.

f. Use explosion-proof lights in all areas within fifty feet of organic solvent cleaning operations.

g. Quantities of organic solvents and other flammable materials present in working areas are not to exceed the amount necessary for one-day operations.

h. Stow organic solvents in excess of one gallon in approved and placarded areas at the end of the working day.

i. Store brushes and small quantities of organic solvents in fireproof lockers at the end of the working day.

j. Be sure that adequate firefighting equipment is on hand before starting the cleaning operations.

k. Keep cleaning rooms free of all materials not required for the immediate operation.

5.3.3.2 Precautions for Personnel. To protect personnel against injury, observe the following precautions:

a. Avoid prolonged or repeated contact of organic solvents with the skin.

b. Do not use organic solvents as hand-cleaning agents to remove grease, dirt or other stains, as they are often skin irritants or drying substances.

c. Use only approved ointments for skin irritations caused by organic solvents.

d. Do not take organic solvents internally.

e. Do not inhale vapors from organic solvents. Vapors of chlorinated hydrocarbons such as carbon tetrachloride, perchlorethylene, and trichlorethylene are highly toxic, and it is necessary to be extremely careful when using them, see paragraph 5.1.4.17. Forced ventilation is required. Do not use these substances in a confined space under any circumstances.

f. Avoid contact with eyes, skin, and clothing.

g. Do not employ pressure to empty organic solvent containers. Do not reuse empty containers without adequate cleaning.

h. Before using, inspect organic solvents for contamination by water, dirt, and other foreign materials. If they are too contaminated for use, set them aside for reclamation or discard them in accordance with prevailing regulations.

Chapter 6

COOLANTS AND ANTIFREEZE COMPOUNDS

6.1 GENERAL

During the operation of some ordnance systems equipment, water, circulated in metal jackets is used as a coolant. The water transfers heat from the mechanism to the surrounding medium. For instance, in the case of certain gun-barrel cooling systems, the water flows to a large tank where it is cooled before being recirculated. Should the coolant not circulate properly because of the formation of ice crystals, overheating and failure of the equipment may result; therefore, when temperatures below 35°F are expected, an antifreeze compound must be used. A similar mixture (heated) is used in circulating systems to prevent the formation of ice on gun shields.

6.2 COOLANT FOR TEMPERATURES ABOVE 35°F.

When temperatures above 35°F are expected, use fresh water as a coolant. Sodium chromate, specification O-S-588, in the proportion of five grams per gallon of water, is used to retard corrosion and the formation of scale on the metal surfaces of cooling systems.

6.2.1 SUBSTITUTE. A corrosion inhibitor compound conforming to Federal Specification O-I-490a may be used in the proportion of one ounce to each two quarts of water.

6.3 COOLANT FOR TEMPERATURES BELOW 35°F.

Use inhibited ethylene glycol, specification O-A-548, diluted with water, as the coolant when ambient temperatures below 35°F are expected. The proportions required for protection from 20°F to -60°F are shown in table 6.1. This compound is miscible with water in all proportions. Mix ethylene glycol with water prior to adding it to the system to insure proper proportioning and thorough mixing. If a suitable container is not available for mixing, the proper amount of antifreeze compound may be poured directly into the system and water added until the system is filled to the service level. Thoroughly mix the liquid by immediately operating the system and adding more water if necessary. Do not pour cold water into a very cold system before adding the antifreeze compound, as freezing may take place. When adding coolant to a hot or overheated system, be careful to avoid cracking the metal water jacket by abrupt changes of temperature. Pour small quantities of coolant into the system while the equipment is operating, and allow to circulate before adding more, or stop the equipment and allow to cool before adding coolant.

Table 6.1 - Required Proportions of Antifreeze at Specified Temperatures

PROTECTION TO	10 GALLONS OF ANTIFREEZE AT SPECIFIED TEMPERATURES	
	ETHYLENE GLYCOL (GALLONS) OR	ETHYL ALCOHOL (GALLONS)
20°F	1.75	1.75
10°F	2.5	2.75
6°F	3.25	3.5
-10°F	4.0	4.0
-20°F	4.5	4.75
-30°F	5.0	5.5
-40°F	5.5	6.25
-50°F	5.75	7.25
-60°F	6.0	8.0

6.3.1 SUBSTITUTE. When fluid conforming to specification O-A-548 is not available, fluids conforming to MIL-H-5559A and MIL-A-8243B may be used. However, the system should be drained before changing from one fluid to another. In an emergency, ethyl alcohol conforming to O-E-760, Grade III may be used after completely draining the system of ethylene glycol. The proportions required for protection from 20°F to -60°F are shown in table 6.1. To inhibit corrosion, two ounces of triethanolamine, specification MIL-E-50011, per ten gallons of antifreeze solution should be added to the water and thoroughly mixed before adding the alcohol.

Chapter 7

OPERATION UNDER EXTREME CLIMATIC CONDITIONS

7.1 GENERAL.

Naval ordnance systems are usually designed to operate over a certain ambient temperature range; therefore, the material used in lubrication and hydraulic systems must be selected to insure reliable and efficient operation over this range. For example, naval ordnance is expected to operate properly at ambient temperatures as low as -65°F, while shipboard ordnance is normally expected to operate satisfactorily over the temperature range -20° to 160°F. Although provision is normally made in the design and lubrication instructions for the expected conditions of operation, it is not always possible to provide for all contingencies in advance. For this reason the following special instructions are given.

7.2 HOT WEATHER ENVIRONMENT.

When subjected to elevated temperature, oils may require more frequent renewal because of run-off due to decrease in viscosity. This is most likely to occur when the oils are used in exposed locations and subject to solar radiation, and may necessitate a change to oils having the required viscosity at the higher temperature. In these cases use approved lubricants selected from the appropriate tables, for example:

NORMAL LUBRICANT	HOT WEATHER REPLACEMENT
VV-L-800	MIL-L-3503
MIL-L-16785 Grade B	MIL-L-16785 Grade A
MIL-G-17745 Grade A	MIL-G-17745 Grade B
MIL-L-19224 Grade A	MIL-L-19224 Grade B or Grade C

Since higher temperatures may also accelerate corrosion, especially where humidity is high, it is important that surfaces exposed to these conditions be examined and relubricated with the specified materials, when necessary.

The recommended operating temperature range for lubricating greases is normally wide enough so th· ffective lubrication is possible under conditions of elevated temperature due solely to climatic variations, however, if temperatures considerably above 160°F are anticipated, specially formulated high temperature greases should be selected from those listed in table 3.10.

When the equipment is returned to normal environment, all materials which were changed because of hot weather environment should be replaced with the materials specified in the lubrication charts and instructions for the equipment.

7.3 COLD WEATHER AREAS.

Lubrication charts and instructions often contain special information on procedures for winterizing equipment for cold weather operations. Changes in lubricants are not usually necessary when temperatures remain above 0°F. For some equipment, the instructions require diluting certain lubricants with lower viscosity oils, such as VV-L-800 or VV-I-530. Some types of equipment are provided with heaters which are used to warm up the equipment to the proper operating temperature range. It should be noted that several low temperature oils are available, and wherever possible, their use is preferable to the dilution of high viscosity oils. For applications involving the use of lubricating grease, low temperature and wide temperature range greases are available to cover a temperature range of -65°F to 350°F. These lubricants are listed in table 3.10.

7.3.1 LUBRICATION.

7.3.1.1 Cold Weather Replacement. To avoid the necessity of applying heat or using diluting agents to remove congealed lubricants when making cold weather replacements, all necessary changes of lubricants should be made before entering the cold weather area. Instructions and lubrication charts should be followed with regard to the proportions of dilutents to be used when these are specified. In other instances oils or greases may be replaced, if necessary, by oils or greases of lower viscosities or consistencies. The following examples are typical:

NORMAL LUBRICANT	COLD WEATHER REPLACEMENT
MIL-L-3503 Oil	VV-L-800 Oil
MIL-L-3572, Grade C, Oil	Same, diluted with 20% MIL-L-3572, Grade A
MIL-L-18486 Oil	MIL-L-18486 Oil diluted with 30% MIL-L-3503 Oil
MIL-G-18709 Grease	MIL-G-7711 Grease
MS 2075 TH	MIL-L-19224 Grade A
MS 2110	MIL-L-19224 Grade A

For equipment such as aircraft guns, rockets, missiles, and fire control instruments which may be subjected to extreme temperatures, the specified lubricants are required to perform satisfactorily in the various applications at these temperatures. See tables 3.3 to 3.10 for lubricants having suitable characteristics. When none of the lubricants listed is considered adequate for the anticipated requirements, the problem should be referred to NAVORDSYSCOM.

7.3.1.2 Emergency Replacement. Sluggish operation or failure of delicate equipment to start may be expected under cold weather conditions if preparations for entering cold weather areas have not been adequate. Under such conditions it may be necessary to apply heat externally to aid in removing congealed lubricants or to permit movement of parts. Where heaters are provided in the equipment, instructions for their use should be followed. Alternatively, congealed petroleum base lubricants may be diluted with a low viscosity oil such as VV-I-530 or VV-L-800 while exercising the equipment, or preferably, after dilution, the lubricants may be removed and replaced with others approved for low temperature operation. Hardened petroleum base greases may be softened with kerosene, specification VV-K-211, to facilitate removal. After removal of hardened greases, the equipment should be thoroughly cleaned and immediately relubricated with materials approved for low temperature operation. (See paragraph 7.3.1.1.) Care should be taken that light oils or kerosene are not allowed to flow into other parts of the equipment. Upon return to normal environment, all lubricants which were changed because of cold weather conditions should be replaced by materials specified in the lubrication charts for normal operation.

7.3.2 HYDRAULIC SYSTEMS. Hydraulic systems should be prepared for cold weather operation by using the appropriate low temperature hydraulic fluid. MIL-F-17111 may be used to replace MS 2075 TH oil used in buffers for cold weather operation. Of the glycerin-water type mixtures, specification MIL-G-18694 Type A should be replaced with the Type B mixture when temperatures below 0°F are expected. Other low-temperature hydraulic fluids are MIL-H-5606 (-65 to 300°F) and MIL-H-81019 (-90 to 210°F). These fluids should be used in those cases where their unique properties would be advantageous.

7.3.3 COOLING AND HEATING SYSTEMS. The use of antifreeze mixtures for protecting cooling systems, and in systems using heated liquid for deicing or maintaining proper operating temperatures is fully explained in chapter 6. Because of the danger of damage from freeze-ups, it is imperative that such systems be properly winterized when cold weather is expected.

Chapter 8

STORAGE OF LUBRICANTS AND RELATED MATERIALS

8.1 STORAGE AND STORAGE LIFE.

Lubricants and related materials may be stored for long or short periods before use. Although they are relatively stable, they are not inert and proper storage methods are important.

8.1.1 FACTORS AFFECTING MATERIALS IN STORAGE. Many factors contribute to the deterioration of materials in storage. The nature of their constituents makes them more or less susceptible to chemical and physical changes, which are accelerated by elevated temperature, humidity, exposure, and the presence of certain catalysts. Principal physical changes are separation and contamination.

8.1.2 TYPES OF DETERIORATION. Oxidation is the most common chemical reaction in stored materials. It occurs when the material is exposed to air, particularly moist air, and is accelerated by high temperatures and the presence of certain catalysts. Materials containing soluble additives may deteriorate by decomposition or precipitation of the additive. These and other chemical changes can produce such harmful substances as acids, gases, water, insoluble gum, and sludge. Animal and vegetable oils are generally more susceptible to chemical change than mineral oils. Physical changes include separation of oils from the soap component in greases and separation of insoluble additives from the parent material in oils.

Rain, melted snow, and water vapor in the atmosphere can contaminate materials which are exposed or improperly sealed. Water vapor trapped in the container prior to sealing can condense when the ambient temperature drops.

8.1.3 ESTIMATED STORAGE LIFE. At present there are no standard tests to determine the storage life of lubricants and related materials. The best available information is derived from practical experience and long-term observations. It is not a good practice to allow lubricants to be stored indefinitely, since the accuracy and usefulness of storage life estimates is of doubtful value and is less reliable than periodic examinations of the materials. Examine the lubricants at least annually while in storage, and semiannually while in service. It is considered good practice to keep accurate records of lubricants used, and use old stock first. Whenever odor or appearance shows evidence of change or separation, make sufficient tests to determine compliance with the applicable specification requirements. Samples of the material for inspection should be obtained from both the top and bottom of the container.

Following is a suggested time schedule indicating the intervals at which lubricants should be tested to determine if there is any change in the original material or any departure from the specification requirements:

Animal or vegetable lubricants and those having three or more additives	--- 3 years
Synthetic lubricants	--- 3 years
Petroleum-base lubricants containing additives	--- 5 years
Petroleum-base lubricants containing no additives	--- 7 years

8.1.4 HANDLING OF LUBRICANTS. Quality and lubricating value of lubricants can be affected by careless handling, causing opening of container seams, which in addition to an increase of safety hazards due to leakage, also lead to contamination.

8.2 SAFETY PRECAUTIONS FOR STORAGE.

Generally, containers used to package materials supplied under specification requirements are suitable for storage purposes. The effects of over-heating, insufficient ventilation, and proximity to dangerous materials must be considered when handling and storing lubricants and related materials. Good housekeeping in handling and storage areas should be stressed at all times.

8.2.1 PRECAUTIONS FOR INDOOR AND OUTDOOR STORAGE.

8.2.1.1 Foundation of Storage Area. All storage areas should have foundations of steel, concrete, or adequately treated wood. Facilities for proper drainage should be provided at all times.

8.2.1.2 Stowage. Containers, when stowed, should be handled carefully to avoid breakage. If they are stacked, overloading of the lower ones should be avoided, as this may open seams and permit loss of material. To prevent accumulation of water in their upper ends, drums should be stored on their sides.

Containers from which material is occasionally being drawn should be kept tightly closed when not in use, and should be stored with the bung or outlet in the up position and securely tightened. Solvent containers should be kept out of the sun and away from heat at all times.

Lubricants and related materials should be segregated from explosives and dangerous materials.

8.2.1.3 Inspection. Before containers are stored, inspect for corrosion, leakage, and complete closure of all plugs, caps, and covers. Remove all corrosion and repaint the affected areas.

During storage, inspect containers frequently for leakage and corrosion. If tests indicate that the contents of leaking containers are in satisfactory condition, the materials should be transferred immediately to serviceable containers. Remove and destroy leaky containers.

Inspect storage areas for adequate drainage, foundations, and properly placed undamaged tarpaulins. Correct all deficiencies found during inspection, immediately.

8.2.1.4 Fire Prevention. Vapors from oils, greases, solvents, and similar products are flammable. When combined with air in certain concentrations they may form explosive mixtures which can be ignited easily by a spark, open flame, or lighted cigarette. To prevent accumulation of flammable vapors, storage areas must be properly ventilated. To safeguard against fire and explosion, display warning signs, prominently, keep oil-fire extinguishing equipment available, and keep interiors of stacks open to permit entry of fire-fighting equipment. Use spark-enclosed fork-lift trucks only.

8.2.2 PRECAUTIONS FOR INDOOR STORAGE. Flammable materials such as oils, greases, and solvents, packed in metal containers or overpacked in fiberboard wood boxes are best protected when stored in special nonflammable buildings. A temperature range of 40° to 80°F is the most desirable for storage.

Vapors from lubricants and related materials may frequently have a toxic effect on the human system. Take every precaution to prevent excessive concentrations of such vapors in the air.

When space is limited, it may be necessary to store lubricants and related materials in a general storage warehouse. In this case, use end bays whenever possible.

8.2.3 PRECAUTIONS FOR OUTDOOR STORAGE. Every effort should be made to store all containers of lubricants or fluids inside. But where outdoor storage is absolutely necessary, a cover, such as a tarpaulin or shed is desirable to afford all-weather protection. When tarpaulins are used, lash them in place securely and position them so that air is free to circulate around the containers. Drums should be stored upside down or on their sides for added protection against rain water, and also to reduce the danger of additional contamination that could have accumulated and entered through the chime. Extremely low temperatures will stiffen some lubricants so that they may not be dispensed with ease, therefore it is desirable to move them into warmer temperature prior to immediate use.

Appendix A

GLOSSARY

ACID - A chemical compound which yields hydrogen ions in a water solution.

ACID NUMBER - The number of milligrams of potassium hydroxide required to neutralize the free, fatty acid in one gram of fat, oil, or wax.

ADDITIVE - Any material added to a lubricant to improve one or more of its physical or chemical properties.

ADSORPTION - Adhesion of extremely thin layers of gases or liquids to solids.

AGE HARDENING - The increase in consistency (hardening) of a lubricating grease with storage time.

ALIPHATICS - Organic compounds in which carbon atoms are joined in open chains as opposed to the ring structures of aromatic compounds.

ALKALI - A chemical compound which yields hydroxyl ions in a water solution.

ALKALI CLEANER - A combination of alkalies or alkaline salts, with or without surface-active agents or wetting agents, which when used in an aqueous solution, cleans by saponification and emulsification.

ALUMINUM-BASE GREASE - A grease made with an aluminum soap.

ANHYDROUS - Devoid of water, especially water of crystallization.

ANILINE POINT - The minimum equilibrium solution temperature for equal volumes of aniline and sample.

ANIMAL OIL - A fat or oil of animal origin, such as tallow, lard, lanolin, and sperm oil.

ANTIFOAM AGENT - A substance added to an oil to prevent formation or retention of excess foam.

ANTIFREEZE - A substance which, when added to water, lowers the freezing point of the water.

ANTIFRICTION BEARINGS - Ball and roller bearings; also modifications of them, such as needle bearings.

ANTIOXIDANT - Oxidation inhibitor; an additive which prevents oxidation.

ANTISEIZE COMPOUND - A material designed to facilitate the assembly or disassembly of closely mated parts, and which will prevent scoring, gouging or galling of parts in close contact.

ANTIWEAR AGENT - A substance added to a lubricant to enhance its antiwear properties.

A. P. I. GRAVITY - An empirical scale for measuring the density of liquid petroleum products, the unit being called the "A. P. I. degree."

APPARENT VISCOSITY - The ratio of shear stress to the rate of shear, the ratio varying with the shear rate.

AROMATIC - Organic compounds which contain one or more benzene rings.

ASPHALT - Black, solid or semisolid bitumens which occur in nature or are obtained as a residue during petroleum refining.

ASTM-CFR ENGINE - Standard engine employed to determine cetane and octane numbers of diesel and gasoline fuels.

ATOMIZATION CHARACTERISTIC - The ability of an oil to be broken up into a fine spray by mechanical means.

BATCH PROCESS - Any manufacturing process in which the charge is added in definite portions, with the operations of the process and the removal of the products being completed on each portion before addition of the next charge.

BEARING - Support for a shaft.

BINDER - A material which promotes adherence between particles of lubricating solids and between lubricating solids and substrate.

BLEEDING - The separation of liquid lubricant from a lubricating grease for any cause. (Although excessive bleeding is harmful, a small amount of free oil can aid lubrication.)

BLOWN OIL - Oil which has had air blown through it to increase its viscosity or to alter other properties.

BONDED SOLID FILM LUBRICANT - A solid lubricant dispersed in a continuous matrix of a film-forming compound such as a resin. Film-forming constituents may also serve a lubricating function.

BONE OIL - Fatty oil obtained by the dry distillation of bones.

BOTTOM SEDIMENT - The emulsion of oil, water, and mud which settles out of crude oil in storage.

BOUNDARY LUBRICATION - Lubrication in which the friction between two surfaces in relative motion is determined by the properties of the lubricant other than viscosity. The films of lubricant involved are of molecular dimensions in thickness.

BRIGHT STOCK - High-viscosity lubricating oils which have been refined to make them clean products of good color.

B. T. U. - British thermal unit. The amount of heat required to raise the temperature of one pound of water 1 degree Fahrenheit.

CALORIE - The amount of heat required to raise the temperature of one gram of water one degree Centigrade.

CATALYST - A substance which promotes chemical reaction between other substances without itself undergoing chemical change.

CENTIGRADE SCALE - Temperature scale in which the freezing point of water is 0° and the boiling point 100°.

CENTIPOISE - One one-hundredth of a poise.

CENTISTOKE - One one-hundredth of a stoke.

CETANE NUMBER - The percentage of cetane in a blend of cetane and alpha methyl naphthalene having the same ignition quality as a sample of diesel fuel.

CHANNELING - A term used in connection with liquid lubricants and flow type lubricating greases to describe the tendency at low temperatures, for these materials to form a plastic structure sufficiently strong to resist flow under gravitational forces only.

CHEMICAL STABILITY - The resistance of materials (e.g. lubricants) to chemical change in any specified environment or media.

CHROMATOGRAPHY - A technique for separating and measuring the components in either a gas or a liquid. The principle is based on rates of adsorption and desorption under specified conditions.

CLOUD POINT - The temperature at which paraffin wax, or any solid substance, begins to crystallize or separate from solution when the oil in which it is dissolved is chilled under prescribed conditions.

COEFFICIENT OF FRICTION - The ratio of the force required to move one object over another, to the total force pressing the two surfaces together.

COHESION - The force of attraction of solid or particulate matter between elements of the same matter.

COLLOID - A substance in very finely divided form (diameter less than 0.001 mm) dispersed in a liquid or gas.

COLLOIDAL SUSPENSION - A mixture of solid and liquid in which the solid is prevented from settling out by extremely fine dispersion and sometimes by the presence of a "deflocculating" agent.

COMPOUNDED OIL - A petroleum oil to which some animal or vegetable oil, or other chemical substance, has been added.

CONSISTENCY - The degree to which a plastic material such as lubricating grease resists deformation under the application of force. Usually indicated by ASTM penetration.

CONVECTION - The transfer of heat by a freely moving gas or liquid.

COOLANT - A substance used to absorb and transmit heat to the surrounding atmosphere.

CORROSION - The gradual destruction and/or pitting of a metal surface due to chemical attack. May be but is not necessarily due to the formation of acidic materials in the lubricant.

CORROSION INHIBITOR - A substance added to an oil, grease, or hydraulic fluid to retard corrosion of metals.

CRACKING - Reduction in size of petroleum molecules by thermal or catalytic action.

CRITICAL MASS - The amount of nuclear fuel necessary to sustain a chain reaction.

CUP GREASE - A lime base grease suitable for compression cups.

DECANTATION - The act of drawing off, or pouring off, a liquid from one container to another without disturbing the underlying sediment or lower liquid layers.

DEHYDROGENATION - Chemical reaction in which an organic compound loses hydrogen to form a less saturated compound; e.g. formation of butylene from butane.

DELIQUESCENT - The property of a solid substance which tends to absorb water and form a solution when exposed to a moist atmosphere.

DEMULSIBILITY - The resistance of an oil to emulsification, or the ability of an oil to separate from water. The better the demulsibility rating, the more quickly the oil separates.

DENSITY - Mass of a substance per unit volume. Water has a density of 1 gram per ml at $4^{o}C$.

DETERGENT ADDITIVE - A substance which, when dissolved in lubricating oil, reduces the adhesion between solid particles of gummy or carbonaceous material and metals. Used to minimize the gumming of piston rings and valve lifters in internal combustion engines.

DEW POINT - The temperature at which the water vapor in air at a definite relative humidity begins to change to liquid upon being cooled.

DIELECTRIC STRENGTH - The average electric field strength at which electrical failure or breakdown occurs under prescribed conditions.

DIPHASE CLEANER - A two phase substance

containing grease solvents, emulsifying agents, and water. Primary cleaning, accomplished in the emulsion phase, is improved by action of the nonemulsifiable solvents phase.

DISPENSABILITY - The property of a lubricant which governs the ease with which it may be transferred from lubricating equipment to the point of application most used in the discussion of grease dispensing systems, where it includes both pumpability and feedability.

DISPERSION - The state of separation of individual solid particles of one phase throughout a second phase.

DROPPING POINT - The temperature at which grease passes from plastic to liquid state under specified test conditions.

EMULSION - Colloidal dispersion of one liquid in another, like oil in water.

EMULSIFIABLE SOLVENT CLEANER - A combination of grease solvents and emulsifying agents. Parts cleaned with oil in water emulsion cleaners should be rinsed with water; parts cleaned with water in oil emulsion should be rinsed with organic solvents.

ENCLOSED LOCATION - A location which is normally heated or otherwise protected from extreme weather conditions.

ESSENTIAL OIL - Oily substances, with characteristic odors, occurring in plants, flowers, leaves and other vegetable matter.

EVAPORATION LOSS - The loss in weight of an oil or grease after heating under specified conditions expressed as a percentage of the original weight.

EXPOSED LOCATION - A location which is not normally heated, or fully protected from exposure to weather.

EXTRACTION - The process by which the soluble constituents of a substance are separated from the substance by treatment with a liquid solvent.

EXTREME PRESSURE (EP) ADDITIVE - A material added to a lubricant to prevent seizing at high operating pressures, as in some types of gearing. May contain sulfur, chlorine, phosphorous or lead compounds.

EXTREME PRESSURE GREASE - A lubricating grease compounded for conditions where heavy loads are expected or where unusual wear between the rubbing surfaces may occur. Such grease usually contains extreme pressure additives.

FATIGUE OF METALS - Cracking, splitting or complete rupture of metals under repeated or continual application of stresses, such as vibrations.

FATTY OILS - General term for natural glycerides which occur in or may be extracted from fats as liquids.

FEEDABILITY - The ability of a lubricating grease to flow to the suction of a dispensing pump at a rate at least equal to pump delivery capacity. (Some lubricating greases do not feed satisfactorily and cause cavitation at the inlet to a dispensing pump. In such cases, feedability can often be made satisfactory by the use of follower plates.)

FERROUS METAL - Any metal alloy containing iron.

FIBER - In lubricating grease, the form in which soap thickeners occur, the soaps crystallizing in threads which are of the order of 20 or more times as long as they are thick. (Most soap fibers are microscopic in in size, so that the grease appears smooth to the eye. The greases having Fibrous appearance are those where the fiber bundles are large enough to be seen by the naked eye. The most common fibrous lubricating grease is sodium base, although not all sodium base greases are fibrous.)

FIBER GREASE - Grease of distinctly fibrous nature which is noticeable when samples of the grease are pulled apart. Greases having fibrous structure resist being thrown off gears and bearings.

FILLERS - Any substance such as talc, powdered mica or other powders, added to greases to make them heavier in weight or in consistency. Fillers do not make greases better lubricants. Except in special applications their use is unnecessary.

FILM STRENGTH - The ability of a lubricant to maintain a film to separate bearing surfaces without breaking down and allowing metal-to-metal contact. The higher the film strength, the greater load the lubricant can support.

FIRE POINT - The lowest temperature at which an oil vaporizes rapidly enough to burn for at least 5 seconds after ignition, under standard test conditions.

FLASH POINT - The lowest temperature at which an oil or fuel gives off sufficient vapor to form a mixture which will ignite, under standard test conditions.

FRETTING - The removal of very finely divided particles from bearing surfaces due to inherent adhesive forces which are assisted by vibrating motion. The finely divided wear particles are then usually oxidized to a corrosion product which has led it to be called Fretting Corrosion, although corrosion does not enter into the basic mechanism. It has

also, in the past, been called False Brinelling and Friction Oxidation when it occurred in rolling contact bearings.

FRICTION, FLUID - The internal resistance to flow due to the cohesiveness of the particles of a fluid.

FRICTION, ROLLING - The resistance developed when a cylindrical, conical, or spherical body is rolled over a surface with which it has only line or point contact.

FRICTION, SLIDING - The resistance developed between two surfaces sliding across each other.

GALLING - The damaging of surfaces of moving parts, caused by removal of particles from localized areas.

GRAPHITE - A non-crystalline form of carbon either natural or synthetic in origin.

GREASE - A solid to semifluid product of a dispersion of a thickening agent in a liquid lubricant. Ingredients to impart special properties may be included.

GUM - Sticky deposit, black or dark brown, which results from the oxidation of unstable constituents in gasoline during storage. Gum is also a word used in the paint industry for certain natural resins.

HEAT STABILITY - Resistance to permanent change resulting from heat alone.

HERTZ LOAD - the "mean Hertz Load" specified is derived from a series of wear measurements at graded loads up to complete seizure, with an apparatus comprising four standard steel balls pressed together in pyramid form; the lower three are fixed while the upper one rotates against them.

HOMOGENIZATION - The process of subjecting a lubricating grease to intimate mixing and intensive shearing action, the end result of which is to obtain a more uniform and higher degree of dispersion.

HYDRAULIC - Denoting processes or equipment in which power is transmitted or motion is controlled by liquids.

HYDRAULIC MEDIUM - Oils that transmit forces through pipes or tubes, as in machine tools, jacks, aircraft control systems and others.

HYDROLYSIS - The interaction of a compound with water, resulting in breaking down the compound into basic or acidic constituents or both.

IMMISCIBLE - Not capable of being mixed; tending to form 2 layers, as do oils and water.

INCOMPATIBILITY - Two lubricating greases show incompatibility when a mixture of the products shows physical properties or service performance which are markedly inferior to those of either of the greases before mixing.

INHIBITOR - Any substance which slows or prevents chemical reaction or corrosion.

INTERFACE - The surface of separation between 2 phases.

JOURNAL - That part of a shaft or axle which rotates in or against a bearing.

KINEMATIC VISCOSITY - The ratio of the viscosity of a substance to its density at a given temperature.

LARD OILS - Animal oils prepared from chilled lard or from the fat of swine. They are compounded with mineral oils to yield lubricants of special properties.

LIME-BASE GREASE - Grease made with mineral oil and a soap containing lime. Greases made with a lime base do not have high melting points, but they are outstanding in their resistance to water, and are not washed away or dissolved by it.

LUBRICANT - Substance capable of reducing friction between 2 surfaces in relative motion.

LUBRICATING OIL - An oil designed to make parts slippery and smooth and reduce the coefficient of friction.

MELTING POINT - The temperature at which a solid is reduced to a liquid by change in heat content. With pure chemicals, this is a single temperature, but with mixtures, as are most petroleum products, the change occurs over a temperature range.

MILITARY QUALIFIED PRODUCTS LIST - A list of products which have met all requirements for qualification under the applicable government specifications.

MILITARY SYMBOL (MS) OIL - One of a series of petroleum-base oils covered by certain Military Specifications. The symbols are four digit numbers which indicate the type of oil and its viscosity range.

MINERAL OIL - Generally speaking, this refers to a wide range of petroleum products and within the viscosity ranges of products considered as oils.

MISCIBLE - Capable of being mixed.

NEUTRALIZATION NUMBER - For an oil the neutralization number is an indication of its acidity or alkalinity. Acidity is measured by weight of alkali needed to neutralize the acid content of a standard sample. Alkalinity is determined by neutralization of a standard sample with an acid.

NLGI NUMBER - A numerical scale for classifying the consistency range of lubricating greases, and based on the ASTM penetration number, NLGI hardness grades are listed progressively as follows:

NLGI NUMBER	ASTM WORKED PENETRATION
000	440 - 475

NLGI NUMBER	ASTM WORKED PENETRATION
00	400 - 430
0	355 - 385
1	310 - 340
2	265 - 295
3	220 - 250
4	175 - 205
5	130 - 160
6	85 - 115

(Greases both softer and harder than this consistency range are well known in the industry. Such greases do not bear an NLGI Number.)

NONSOAP GREASE - A product like grease in appearance and consistency but containing mineral oil and heavy residuals from distillation of petroleum stocks. Also, a grease made with a thickening agent other than a metal soap.

NONSOAP THICKENER - Any of several specially treated or synthetic materials, excepting the metallic soaps of long chain fatty acids, which can be either thermally or mechanically dispersed in liquid lubricants to form lubricating grease. Also called Synthetic Thickener. Certain types are called Inorganic Thickener.

OILINESS - Under certain conditions of lubrication, one lubricant may reduce the friction in a bearing more than a similar oil of the same viscosity and applied in the same way. This decrease in friction is called oiliness.

OXIDATION INHIBITOR - A substance added to an oil, grease, or hydraulic fluid to inhibit or retard its deterioration by oxidation.

OXIDATION STABILITY - The resistance of a substance to reactions with oxygen, which increase its content of acid-forming constituents or other deleterious substances.

PENETRATION (of a grease) - The depth, expressed in units of tenths of a millimeter, to which a standard cone penetrates a sample.

PENETRATION, UNWORKED - The depth, expressed in tenths of a millimeter, to which a standard cone penetrates a sample of grease.

PENETRATION, WORKED - The depth, expressed in tenths of a millimeter, to which a standard cone penetrates a sample of grease after subjection to a specified working treatment.

PETROLATUM - A purified mixture of petroleum hydrocarbons with unctuous nature.

PETROLEUM-BASE GREASE - A semisolid lubricant, generally a mixture of a gelling agent and a petroleum-base lubricating oil.

PETROLEUM-BASE OIL (MINERAL OIL) - An oil derived from petroleum, and composed largely of hydrocarbons.

PHASE - Any homogeneous portion of a system; thus, a system comprising a liquid and vapor has 2 phases. One phase may be dispersed throughout another, as in emulsions.

PLASTICITY - A complex property of a material involving a combination of the properties of mobility and yield value. A plastic material is distinct from a solid in its possession of mobility and from a liquid in that it requires a measurable force to start flow.

POISE - Unit of absolute viscosity.

POUR POINT - The lowest temperature at which an oil will pour or flow when it is chilled without disturbance under prescribed conditions.

POUR POINT DEPRESSANT - A substance added to a lubricant to lower its pour point.

POWER TRANSMISSION FLUID (HYDRAULIC) - A liquid capable of transmitting power by virtue of its low compressibility and the laws of hydrodynamics.

PRECIPITATE - A substance separating in solid form from a liquid in which it was formerly dissolved, the separation being caused by some chemical or physical change. It is to be differentiated from a substance held only mechanically in suspension, which is known as sediment.

PRESERVATIVE - A substance which, if applied properly to an equipment, will retard deterioration resulting from exposure to deleterious conditions.

PRESSURE-WEAR INDEX - A number obtained in testing a grease with a Shell Four-Ball Extreme-Pressure Lubricants Tester. The number is indicative of the load-carrying capacity of the grease.

PRETREATMENT - Preparation of substrate to promote adherence by cleaning and increasing the area and irregularity of the substrate. This pretreatment can be either mechanical (sandblasting) or chemical (phosphating).

PROPRIETARY MATERIALS - Materials for which no military specification exists. Such a material must be requisitioned with an accurate description of properties and source.

PUMPABILITY - The ability of a lubricating grease to flow under pressure through the line, nozzle and fitting of a grease dispensing system. It is best indicated by the apparent viscosity at moderate rate of shear.

QUENCHING OILS - Petroleum oils in which heated metals are submerged to cool and harden them.

REACTION FILMS - A lubricating film formed during sliding or rolling of loaded solid surfaces by chemical reaction with constituents of the operating or lubricating media.

RESIDUAL OIL - Bottom products from distillation of crude oil.

RHEOLOGY - The science of the flow of viscous fluids.

SAE VISCOSITY CLASSIFICATION SYSTEM - A system devised by the Society of Automotive Engineers for classifying lubricating oils in terms of viscosity. A higher SAE number denotes a more viscous fluid.

SAYBOLT FUROL VISCOSITY - The number of seconds required for a specified volume of extremely viscous liquid, at a prescribed temperature, to flow through the orifice of a Saybolt Furol Viscometer.

SAYBOLT UNIVERSAL VISCOSITY - The number of seconds required for a specified volume of liquid, at a prescribed temperature, to flow through the orifice of a Saybolt Universal Viscometer. Temperatures normally specified are 100°F, 130°F and 210°F. Generally liquids having rates of flow greater than 32 seconds and less than 1000 seconds are measured by the Saybolt Universal Viscometer method. The unit of measure is Saybolt Universal Seconds, SUS.

SCORING - The scratches, or lines, resulting from motion between two metals in close contact.

SEIZING - The taking hold of contacting surfaces, resulting from high friction or poor lubrication. The result is the restriction of motion.

SELF-LUBRICATING MATERIALS - Solid structural member containing a lubricating phase capable of forming interface films to reduce friction and wear between moving surfaces under load.

SHEAR STABILITY - The ability of a lubricating grease to resist changes in consistency (hardness), during mechanical working. Working may be in any of several types of laboratory machines or may be in actual service. This may also be called Mechanical Stability.

SILICONE - The generic name for one of the class of organicpolysiloxanes. Produced in liquid, plastic and solid forms, and characterized by ability to withstand the action of high temperatures, chemicals and electric current.

SILICONE OILS - A liquid silicone that is characterized by good resistance to heat and oxidation, high viscosity index and low pour point, but not fully equal to mineral oil as lubricants for steel on steel.

SLUDGE - A word which when applied to lubricating oils, means undesirable residue and deposits formed in crankcases by the oils after extended use. The best oils have the greatest tendency to resist formation of sludge.

SLUSHING OIL - Oil used on metals to form a protective coating against corrosion. It should coat the surface completely, and yet be removable without undue labor. The oil can be applied by brushing, spraying or dipping.

SODA-BASE GREASE - A mixture of mineral oil and a soap containing soda. Greases made with a soda base do not have good resistance to water and are often readily dissolved or washed away by it. They do have high melting points and other characteristics, making them preferable to other type greases, except where moisture contamination is likely.

SOLID ADDITIVE - A solid lubricating material used in suspensions, slurries, or dispersed in bonded films that is capable of lubrication without chemical change (reaction). For example, graphites, oil suspensions, grease additives and solid film components.

SOLID LUBRICANT - A solid substance that adheres to relatively moving surfaces under contact conditions and reduces both friction and wear.

"SOLUBLE" CUTTING OIL - A mineral oil containing an emulsifier which makes it capable of mixing easily with water to form a coolant for metal cutting tools and the work.

SOLVENT - A chemical that can dissolve another. Also, the component of a solution present in excess.

SOLVENT CLEANER - An organic grease solvent, usually a relatively light hydrocarbon fraction such as naphtha, or a chlorinated hydrocarbon such as perchlorethylene.

SOLVENT-VAPOR CLEANER (VAPOR PHASE CLEANER) - A grease solvent of the chlorinated hydrocarbon class, usually trichlorethylene, used in a cleaning apparatus known as a vapor degreaser. In this apparatus, greasy objects at a temperature below the dew point of the solvent vapors are suspended above the boiling solvent. Solvent vapors condense on the objects, dissolve the grease, and drain into the solvent reservoir.

SPALLING - The cracking and flaking of metal particles from the surface of a metal.

SPECIFICATION - A description of the technical requirements for a material, product, or service, including the procedures by which it can be determined that the requirements have been met.

SPECIFIC GRAVITY - The ratio of the weight

of a given volume of a substance to the weight of an equal volume of water at a specified temperature.

SPECIFIC HEAT - The ratio of the thermal capacity of a substance to that of water at a specified temperature.

SPONTANEOUS IGNITION TEMPERATURE - The temperature at which an oil ignites of its own accord in the presence of air under standard conditions.

STOKE - The unit of measure of kinematic viscosity. It is the ratio of viscosity to density.

STORAGE LIFE - The period of time during which a material can be stored under controlled conditions and remain unchanged so as to be suitable for the purpose intended.

SURFACE TENSION - The tension exhibited by the free surface of liquids, measured in dynes per centimeter.

SURFACTANT - A surface active chemical or additive used to impart needed surface energy properties. For example, wetting agent, dispersing agents, etc.

SYNTHETIC GREASE - A synthetic oil thickened with a soap, mixture of soaps, or other gelling agents.

SYNTHETIC OIL - An oil synthesized by chemical reaction, such as by the formation of an ester from the reaction of a synthetic organic acid and an alcohol.

THERMAL VALUE - Calories per gram or B.T.U. per pound produced by burning fuels.

THICKENING AGENT - The solid particles which are relatively uniformly dispersed to form the structure of lubricating grease in which the liquid is held by surface tension and other physical forces. (The solid particles may be fibers, as in the case with various metallic soaps, or plates of spheres, as is the case with some of the nonsoap thickeners. The only general requirements are that the particles should be extremely small and that they be capable of uniform dispersion in the liquid lubricants.)

THIN FILM LUBRICATION - A condition of lubrication in which the film thickness of the lubricant is such that the friction between the surfaces is determined by the properties of the surfaces as well as the properties of the lubricant.

THIXOTROPY - Property of certain jelly-like substances to behave as liquids when agitated or stirred.

UNCTUOUS - Having a greasy, oily or soapy feel when rubbed or touched by the fingers.

VAPOR PRESSURE - The outward pressure of a mass of vapor at a given temperature, when enclosed in a gas-tight vessel. It is an index of the volatility of the liquid from which the vapor was produced.

VEGETABLE OIL - Oil obtained from seeds, nuts, or other parts of plants.

VISCOSIMETER - An apparatus for determining the viscosity of a liquid.

VISCOSITY - Resistance to flow. Falls off on heating. Affects the thickness of oil films under load and the power absorbed by the oil in a mechanism.

VISCOSITY ABSOLUTE - Resistance to flow expressed in units of force, an empirical expression in Redwood seconds or the like.

VISCOSITY APPARENT (OF LUBRICATING GREASE) - The viscosity expressed in poises calculated from measurements at a given rate of shear. The value varies with the shear rate.

VISCOSITY INDEX (V.I.) - A figure of merit, rating highest those products in which viscosity is least affected by change of temperature.

VISCOSITY INDEX IMPROVERS - These are synthetic hydrocarbon products of enormously high viscosity, due to their large molecules. Oils made by thickening thin oils with viscosity index improvers have a better V.I. than oils of equal viscosity prepared normally, however, they are more susceptible than ordinary oils to shear breakdown.

VOLATILITY - The percentage of an oil recovered at a specified temperature in a standard distillation test. The property of a liquid denoting its tendency to vaporize.

WATER RESISTANCE - The ability of a lubricating grease to withstand the addition of water to the lubricant system without adverse effects.

WASHOUT RESISTANCE - The ability of a lubricating grease to resist being removed from a bearing when acted on by a stream of water.

WATER ABSORPTION CHARACTERISTICS - The characteristics of a lubricating grease when water is added to the lubricant system. Water Absorption Characteristics may be measured by any of several suitable tests in which the lubricating grease may react in any of three ways, described as follows:

WATER SOLUBLE - The lubricating grease absorbs the water, and then de-gels to a semifluid consistency.

WATER ABSORBENT - The lubricating grease absorbs relatively large quantities of water with small or no change in consistency, and without leaving free water as a separate phase.

WEAR LIFE - The endurance limit of solid film lubricant coatings is that point (i.e.

stress cycles or time) at which the film is no longer capable of providing acceptable friction and wear properties. The end point will vary with type of lubricant and the application is influenced by load, speed, temperature, pressure and specimen geometry.

WETTING AGENTS - Substances which, in minute concentrations, increase the ability of liquids to spread over, or "wet" solid surfaces; include soaps, synthetic detergents, sulfonated oils, other chemicals.

WHITE OILS - Colorless and odorless mineral oils. They are also desirable lubricants where tasteless, colorless, odorless oils must be employed.

WORK FACTOR - The measure of the resistance of an oil to deterioration when subjected to an endurance test.

WORKING - Subjecting lubricating grease to any form of agitation or shearing action.

YIELD POINT (OR YIELD VALUE) - The minimum force required to produce flow of a plastic material.

INDEX