THE VECTOR SOLVER

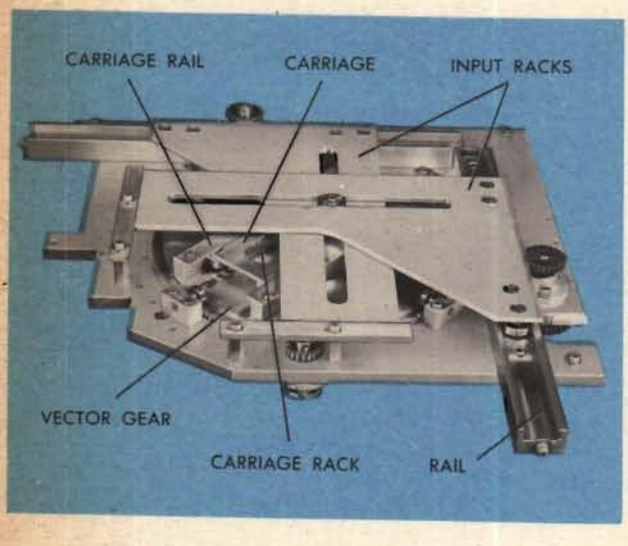

A vector solver is usually mounted on a separate base plate with the input and output gears at the sides of the unit. The *inputs* are carried by the *two racks.* The *outputs* are carried by the *vector gear* and the *carriage rack.*

In order to remove a vector solver, other units and gearing groups often must be removed first. For this reason, the exact source of the trouble should be located before removal is considered. If the unit must be removed for repair, consult the instrument OP for instructions.

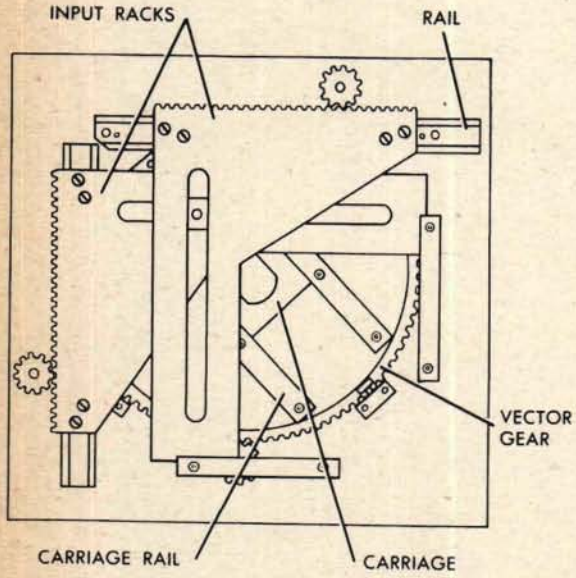

Typical symptoms

If a test analysis and unit check test indicate that a vector solver is not operating normally, look for one or more of the following typical symptoms:

JAMMING: The carriage, the vector gear, or one or both of the racks cannot be moved by hand.

STICKING: The carriage or one or both racks moves sluggishly, or resists moving past certain points.

EXCESSIVE LOST MOTION: Too much play exists between a rack and rail, the carriage and its rails, or the carriage rack and its meshing gear.

SLIPPING: Moving the input racks results in only intermittent movement or in no movement of the vector gear, or of the carriage rack or pinion.

Locating the cause

Carriage: jamming or sticking

The carriage may be jammed at the end of its travel by driving against its stop on the vector gear, breaking the stop, and overrunning it.

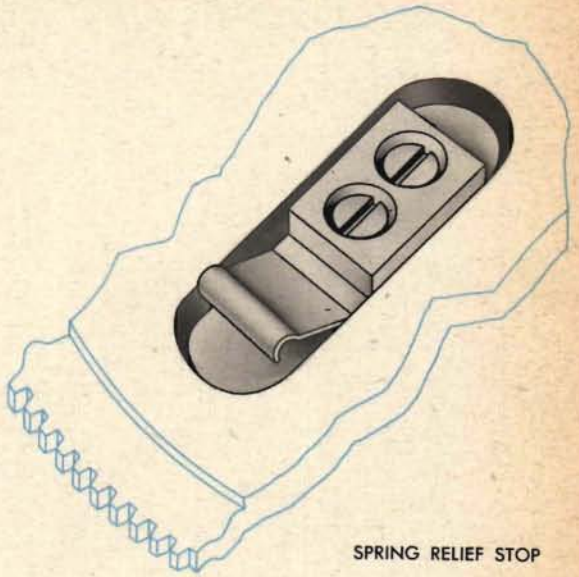

SPRING RELIEF STOP

The carriage stop mounted on the vector gear is in the form of a spring relief in some instruments, while in others it is a positive type. Usually a carriage jammed on a spring relief stop may be pushed back into its normal travel range without disassembling the unit. A carriage jammed on a positive post stop can be freed only by disassembling the unit.

POSITIVE POST STOP

If the carriage jams or sticks within its normal travel, the trouble may be caused by damaged or dirty gear teeth or insufficiently lubricated carriage rails. A rack slide block frozen on the carriage pivot stud may also prevent movement of the carriage.

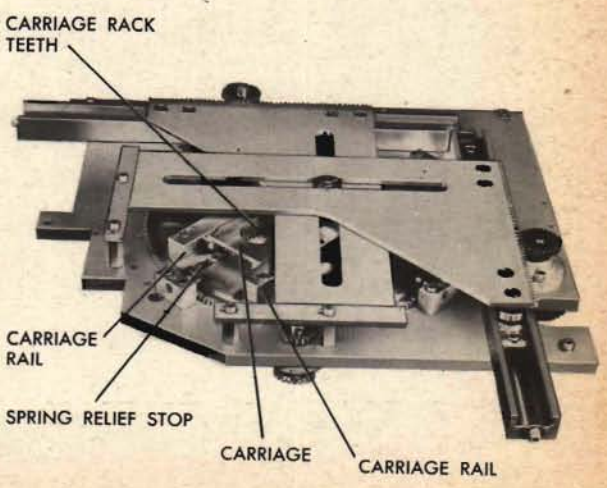

Try to free the carriage by pushing it along the rails. If the carriage can be moved, it is often possible to locate the cause of jamming and sticking and correct it without disassembling the unit. Cleaning and lubricating the rails will often eliminate sticking.

If the carriage cannot be moved, a rail, the carriage, or a rack slide block on the carriage pivot stud may be damaged, and the unit should be disassembled for repair.

Vector gear: jamming or sticking

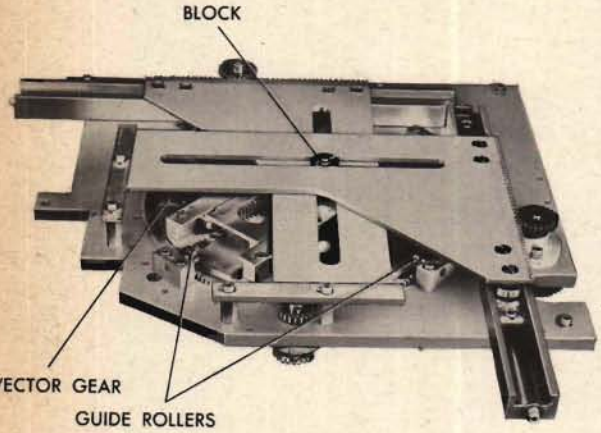

A vector gear may jam or stick because of damaged or dirty gear teeth, guide rollers, or vector-gear bearings. Dirt, burrs, or nicks in the gear teeth can sometimes be removed without disassembling the unit. If the guide rollers do not turn freely and the vector gear moves sluggishly, the guide roller assemblies should be removed and washed. On some units this can be done without disassembly.

The vector gear may not turn or may turn sluggishly because the slide blocks jam or stick on the pivot stud. Inspect these blocks for jamming or sticking. The block in the slot of the outside rack can be repaired without disassembling the entire unit.

Often the vector gear can be moved from its jammed position by hand and cleaned and lubricated without disassembling the unit. Turn the vector gear to inspect the teeth for dirt or damage.

Racks: jamming or sticking

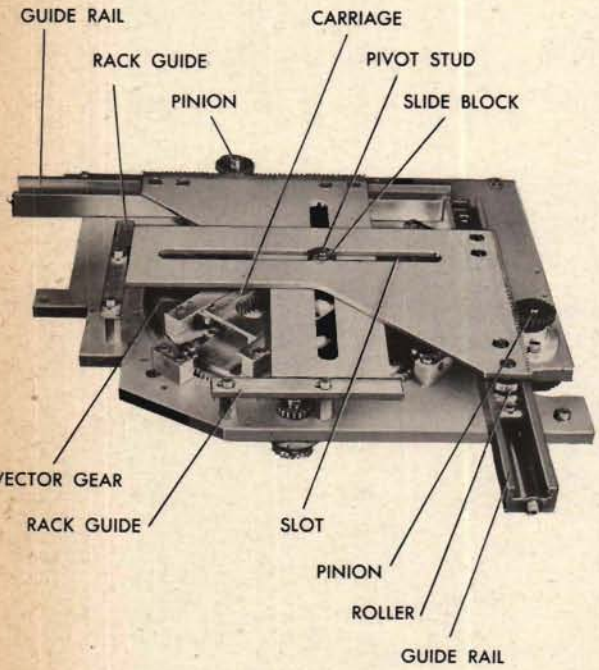

A rack may jam or stick because of a dirty or damaged rack guide, guide rail, rack roller, rack slot, slide block, or gear teeth. Slight damage can be repaired and the parts cleaned and lubricated without disassembling the unit. Improper positioning of rollers may cause them to jam or stick in a rail, or make too tight a mesh between the rack and pinion. Shake the rack to check lost motion between the rollers and the rail. Usually a block which sticks slightly in a rack slot can be restored to normal operation by cleaning and lubricating the sliding surfaces and running the parts back and forth to work them in smoothly. Disassemble the unit for repair only if it sticks enough to cause serious errors in the operation of the instrument.

If neither rack can be moved and the cause is not found in the parts in contact with the racks, the trouble may be caused by a jammed carriage or vector gear.

Excessive lost motion

Excessive lost motion of the racks may be caused by worn parts or a loose or bent roller stud. If lost motion is not reduced, it may allow a rack to cock and cause it to jam or stick later. Shake each rack to check that the lost motion does not exceed the limits given on the assembly drawing. If it does, the racks should be removed to reposition the rollers.

Place the carriage and the vector gear at various positions within their travel and shake the racks at each position. Lost motion between the racks and the carriage may be caused by worn slide blocks and rack slots. Such lost motion can be remedied only by disassembling the unit and replacing both the blocks and the racks.

Excessive lost motion between the carriage and its rails, or between the carriage and the output gear may result from wear or from improperly positioned guide rails. Lost motion of the carriage may be checked by shaking the carriage. Refer to the assembly drawing for the allowable maximum.

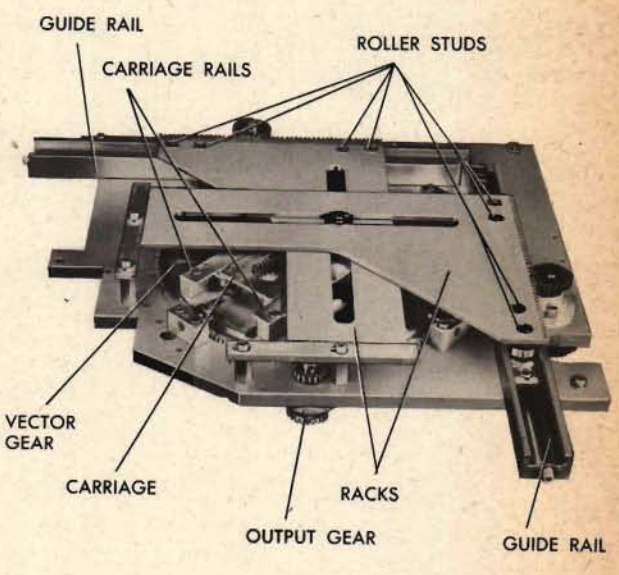

Slipping

If moving the input racks results in only intermittent movement of the vector gear or of the carriage rack or pinion, the trouble may be caused by stripped rack teeth, a broken pivot stud, or by sheared pins in either an input or output gear. Replace any rack which has stripped teeth. To inspect for a loose pivot stud, move the carriage and turn the vector gear to move the racks through their full travel. If the racks do not move smoothly, the pivot stud may have loosened or sheared, and the unit should be disassembled for repair. To check for a sheared pin, hold the gear and try to turn the shaft. If the gear does not turn with the shaft, repin the gear.

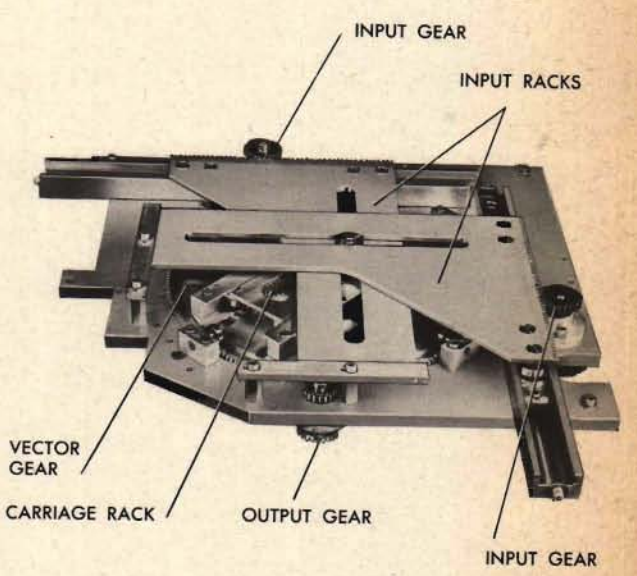

Disassembling the unit

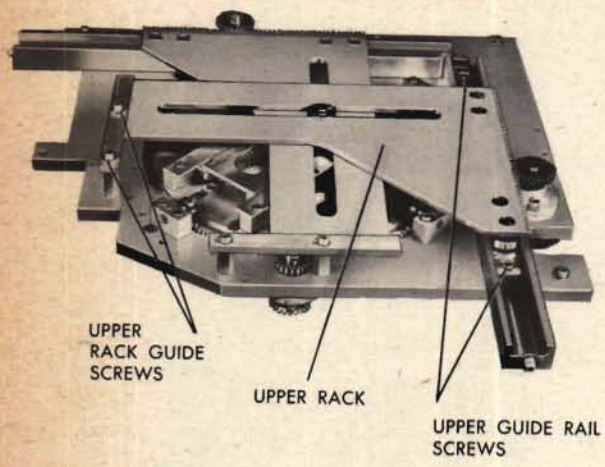

1 Remove the cotter pin and spacer from the pivot stud.

2 Remove the screws holding the upper rack guide.

3 Remove the screws holding the upper guide rail.

4 Lift off the upper rack, rack guide, and guide rail together.

5 Remove the upper slide block and keep it with its rack. Save the spacers.

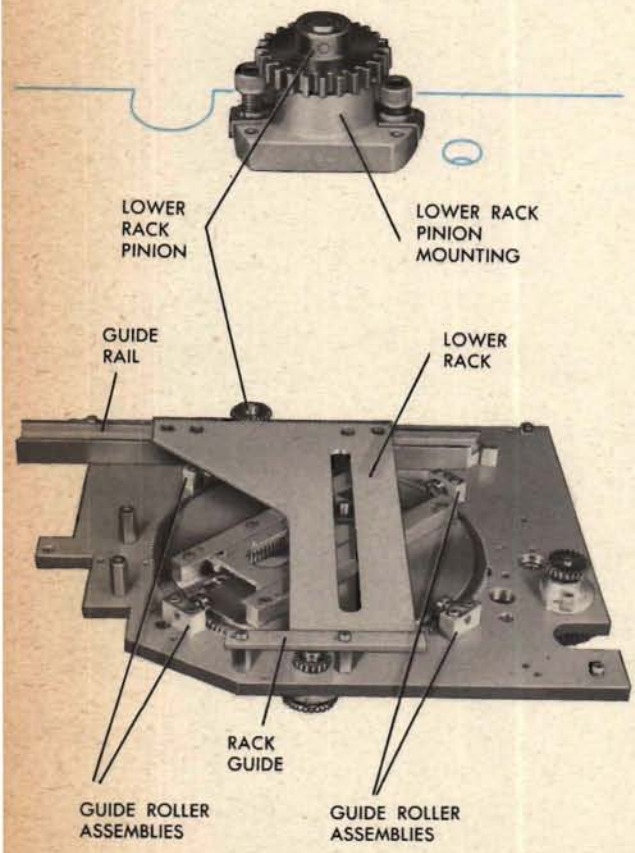

6 Loosen the mounting of the pinion gear meshing with the lower rack.

7 Remove the lower rack, rack guide, and guide rail together.

8 Remove the lower slide block and keep it with its rack. Save the spacers.

9 Remove the carriage from the vector gear.

10 Remove the four guide roller assemblies.

11 Unpin the gear on the underside of the conter shaft.

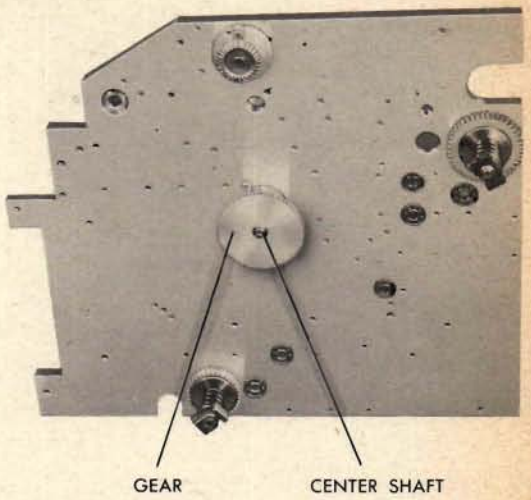

12 Remove the center shaft.

13 Lift off the vector gear.

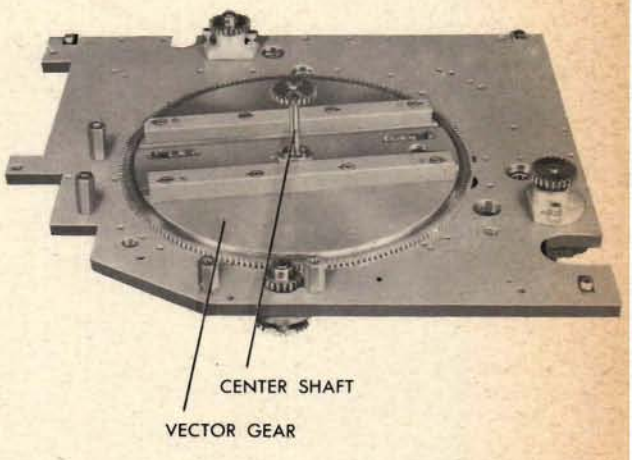

14 Remove the center bearing housing. Do not remove the rollers or the rack from the carriage unless these parts require replacement. The carriage rollers cannot be adjusted.

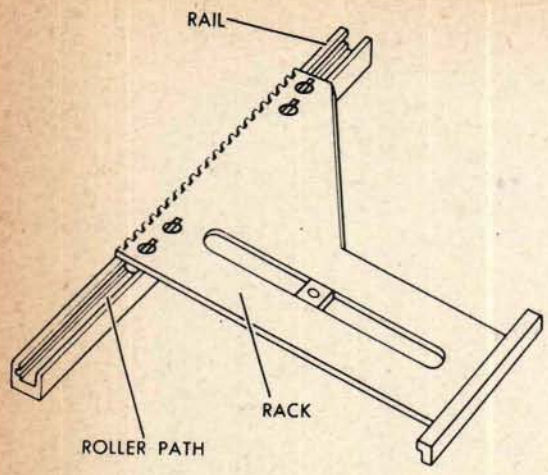

Repairing the parts

Repairing a rail

First use tissue to clean the roller path in the rail. Carefully remove any embedded foreign material. Then check the straightness of the roller path, and if necessary polish rough or high spots, trying the rack in the rail frequently until a good fit is obtained. After completing this work, wash the parts thoroughly with an approved solvent and lubricate.

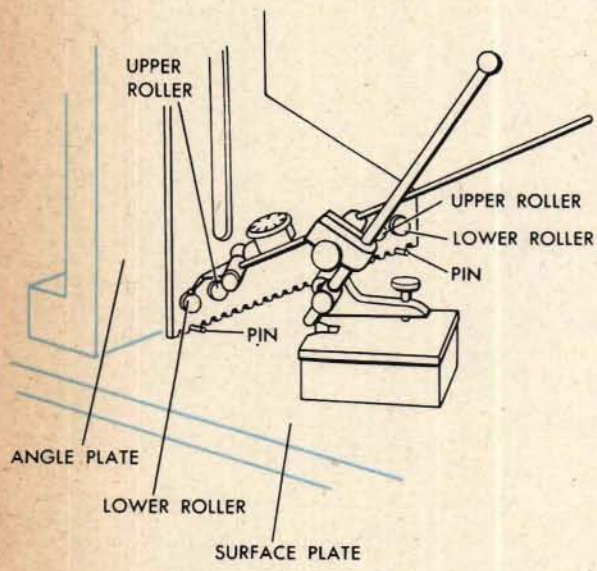

Adjusting the rollers

The lower rollers establish the pitch line of the rack in relation to its meshing gear. These rollers affect the alignment of the rack slots as well as the mesh of the rack and the gear. Remove the rack and mount it against an angle plate on a surface plate. Support the rack under the teeth, using two identical pins between 0.070 inch and 0.075 inch in diameter. Place a pin at each end of the rack.

With a surface gage and a dial indicator, measure the height of the lower rollers. The heights of these rollers must agree with the assembly drawing and be within 0.0002 inch of each other. If these rollers are repositioned, the rack slots must be checked for squareness.

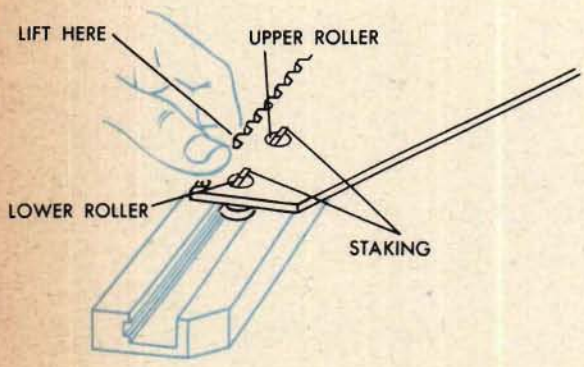

The upper rollers control the play between the rack and the rail. If the play exceeds 0.0005 inch, turn the roller studs with a screw driver. A strip of feeler gage material (0.001 inch) can be used to check the clearance between the roller and the roller path. After positioning the rollers, stake a small amount of metal into the screw driver slots of the stud heads. The rollers should be free enough in the rail for the rack to drop back of its own weight if it is raised slightly with one finger.

For an explanation of removing and replacing a riveted stud, see pages 77-79.

Squaring the racks

The slots in the two input racks must be at right angles to each other. Mount the two racks, their rails, and guides on the plate. The vector gear and other parts should not be reinstalled.

Squareness of the racks must be tested with the indicator mounted first on the upper rack and then on the lower rack to make certain that all the necessary conditions have been established.

Wedge the lower rack. Then mount a dial indicator firmly on the top rack with the point of the indicator on one face of the slot in the lower rack. Move the top rack through its full travel. Observe the reading of the dial as the indicator point moves along the face of the lower rack slot.

If the total indicator reading exceeds 0.001 inch, check the setting of the lower rollers in the lower rack, as explained on the preceding page. It is advisable to check the lower rollers of the upper rack at the same time. Remount the racks and repeat the check for squareness. If the indicator reading still exceeds 0.001 inch, reposition the rail which holds the upper rack. To do this, remove the dowels from the rail. Replace the rail and its rack and repeat the check for squareness. If the indicator reading is still excessive, loosen the screws holding the rail, and move the rail within the clearance of its screw holes until a reading of 0.001 inch or less is obtained. Then tighten the screws and redowel the rail with oversize dowels.

If the total reading is within the proper tolerance when the indicator is mounted on the upper rack, the indicator must be mounted on the lower rack and the test repeated as explained for the upper rack.

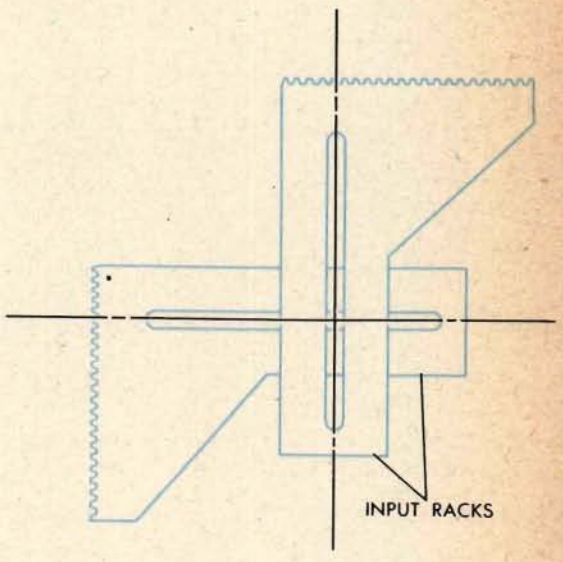

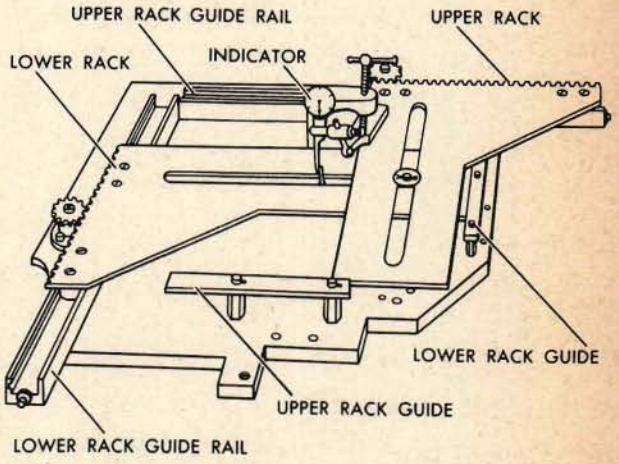

Adjusting the carriage

Excessive up-and-down motion of the carriage between the rail and the vector gear can be reduced by removing the rails and polishing their under surfaces. Be careful to polish the rails equally so that the under sides of both rail flanges remain parallel with the vector gear surface and equidistant from it.

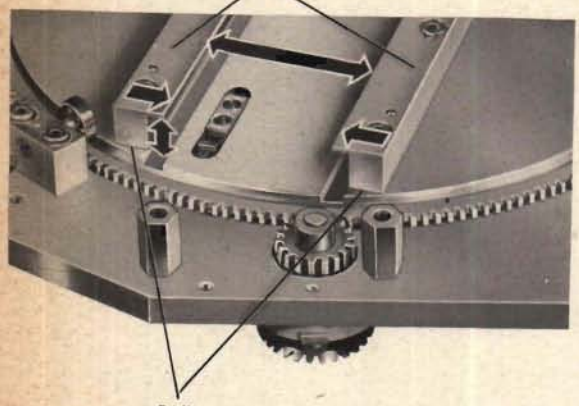

Excessive side motion of the carriage between the rails can be eliminated by repositioning the rails. Remove the rail dowels and tap both rails equal distances toward the center. It is very important to move the rails *equal* distances because the eccentric pivot stud in the carriage must be centered again after this operation. After repositioning the rails, check the mesh of the carriage rack and the pinion. If the mesh is not satisfactory the rack must be repositioned.

Replacing carriage rollers

Carriage rollers are not adjustable because they are mounted on concentric studs. When a damaged carriage roller is replaced, a new stud should always be used. These studs fit into blind holes in the carriage and are held in position by straight pins.

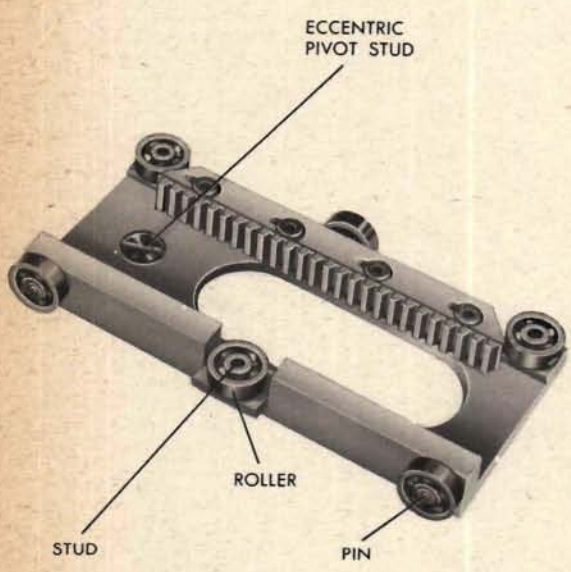

UNDER SIDE OF CARRIAGE

To remove a stud, drive out the straight pin and carefully pry up the roller and stud. Rivet the new stud to the new roller and insert the stud in the carriage hole. For a detailed explanation of riveting and removing studs, refer to the explanation on page 76 .

Drill and ream the pin hole to fit a slightly oversize straight pin. Drive in the new straight pin and stake metal over *both* ends of the hole.

Centering the pivot stud

The eccentric pivot stud in the carriage must be positioned at the exact center of the vector gear before the racks are mounted. Replace the vector gear on the plate and fasten the four guide rollers. Position the carriage in its rails so that the pivot lies directly above the center of the gear, and wedge the carriage in this position.

Mount a surface gage on the plate and use a dial indicator to measure the eccentricity of the stud when the vector gear is turned. Reposition the carriage and turn the stud until the indicator readings vary a minimum amount for one revolution of the vector gear. The allowable maximum is shown on the assembly drawing.

Remove the carriage and stake a small amount of metal into the stud. Tap lightly, and support the carriage directly under the staking tool. A heavy blow may warp the carriage and cause it to bind in its rails.

If the stud must be replaced, refer to the detailed explanation on page 78.

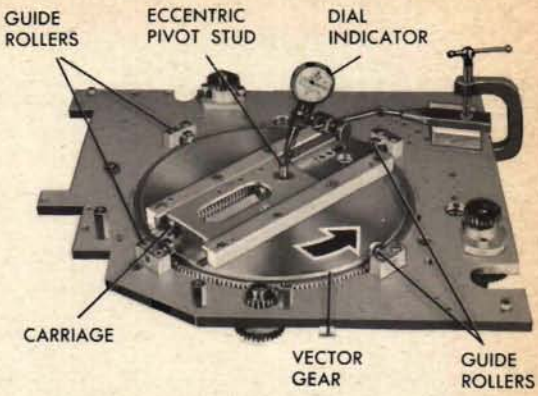

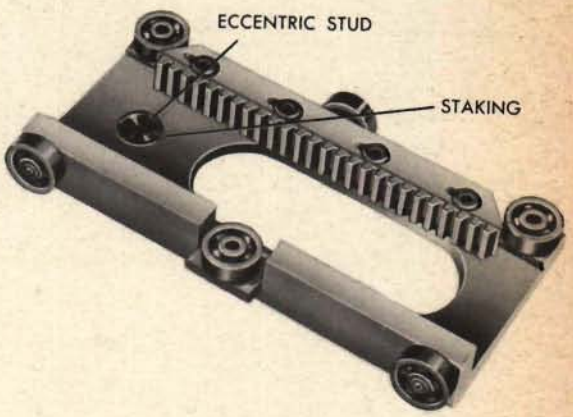

Fitting a new slide block

Use a fine oilstone to smooth burred or rough edges of the block. Remove any extremely sharp edges, but leave them square. It is very important not to round or chamfer the edges.

To reduce the width of the block, polish the sides on a piece of crocus cloth placed on a flat surface, using long, even strokes while holding the block square. Be sure to remove equal amounts from each side, so that the hole remains centered. Measure the block occasionally with a micrometer to be certain that the sides are parallel.

Polish the block until it fits closely in the widest portion of the slot. Polish the rest of the slot to fit the block, using crocus cloth wrapped once around a steel bar. Be sure to keep the slot sides square and flat.

Before trying the block in the slot, thoroughly wash, dry, and lubricate them both. The fit is correct when the block can be moved the full length of the slot. Move the block back and forth by hand until it travels smoothly from one end to the other. Finally, wash the block and slot again and lubricate.

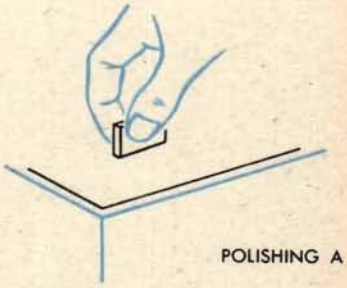

POLISHING A SLIDE BLOCK

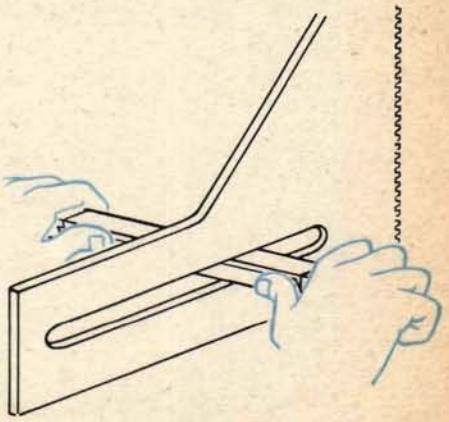

POLISHING THE SLOT

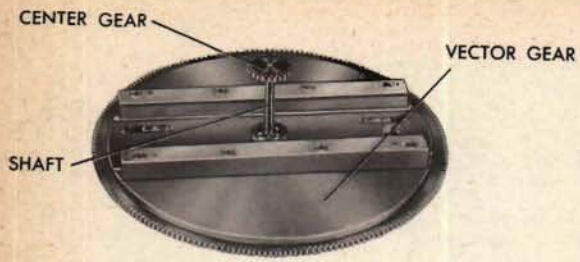

Reassembling the unit

Wash and dry all the parts and lubricate each part as it is replaced.

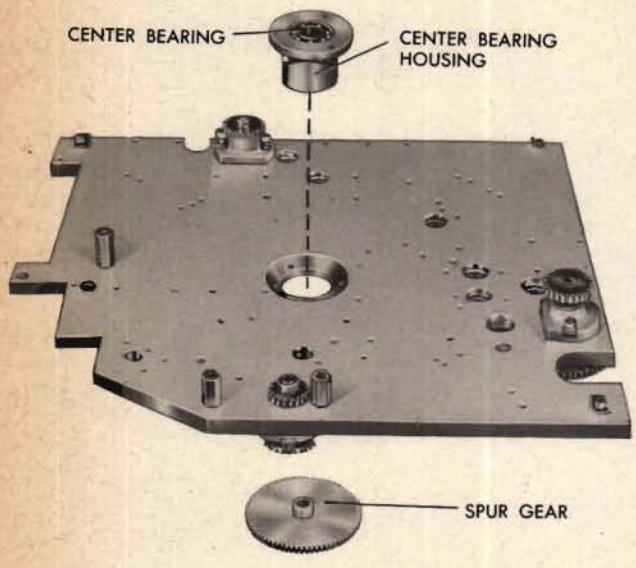

1 Replace the center bearing and housing.

2 Replace the vector gear.

3 Replace the center gear and shaft.

4 Repin the spur gear to the bottom of the center shaft.

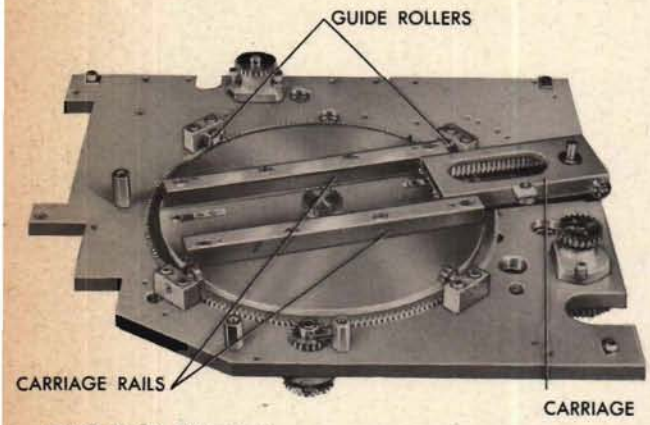

5 Replace the four guide rollers and secure them. Each guide roller is numbered so that it can be replaced where the corresponding number is stamped on the plate.

6 Slide the carriage on its rails.

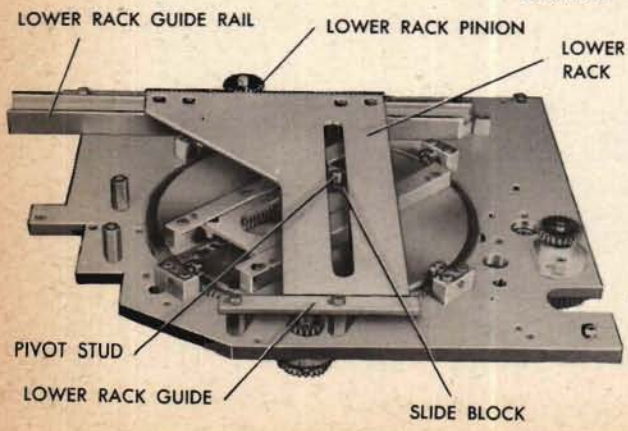

7 Place the lower slide block on the pivot stud. Replace the spacers.

8 Mount the lower rack, guide rail and rack guide, and fasten them in place. Be careful to mesh the rack teeth with the pinion.

9 Tighten the pinion mounting.

10 Place the upper slide block on the pivot stud.

11 Mount the upper rack, guide rail, and rack guide.

12 Replace the spacer and cotter pin on the pivot stud.

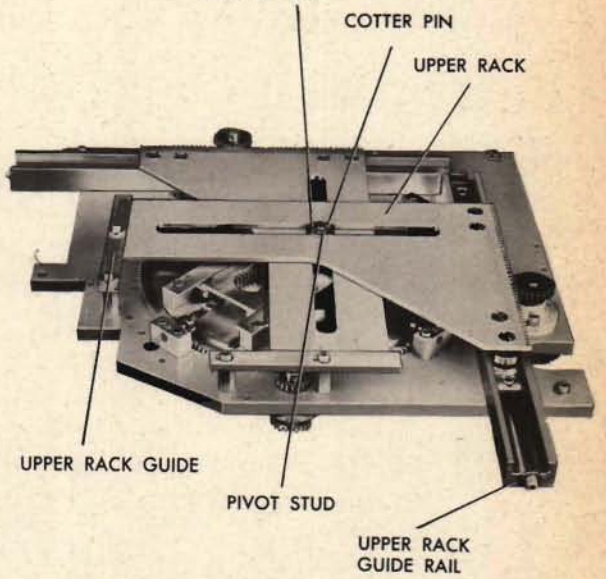

Bench checking the unit

1 Check the assembly of the unit against the assembly drawing.

2 Position the carriage at one end of its travel. Check the racks for smoothness of operation and proper lost motion by turning the vector gear to move them through their full travel.

3 The eccentric studs in the racks and the pivot stud in the carriage should have been staked.

4 Lost motion between the carriage and its rails should be at a minimum. For the maximum allowable lost motion refer to the assembly drawing.

5 It should be possible to bring the carriage pivot stud to a zero point, where there is no motion of the racks when the vector gear is turned.

6 Check the smoothness of the frictions by screwing the clamp down two or three turns and rotating the gear. Final adjustment of the frictions is made after the unit is replaced in the instrument. Refer to the instrument OP for instructions.

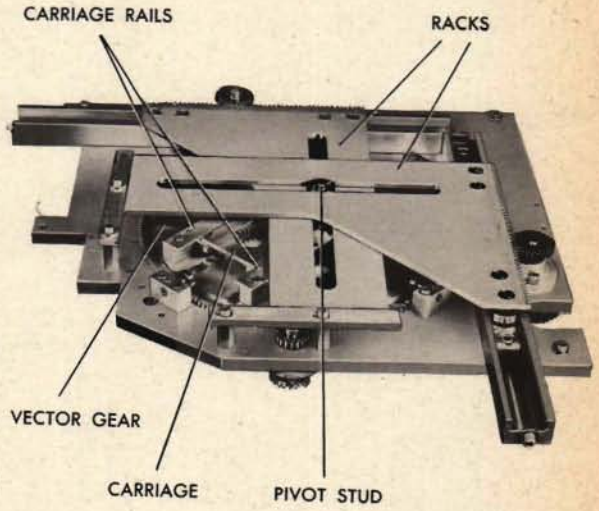

DISK INTEGRATORS

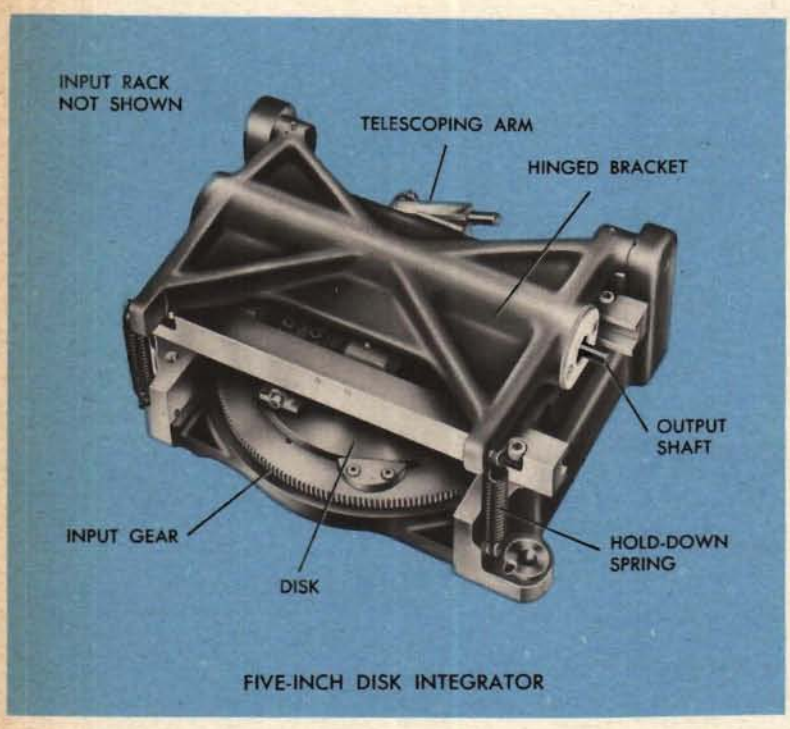

FIVE-INCH DISK INTEGRATOR

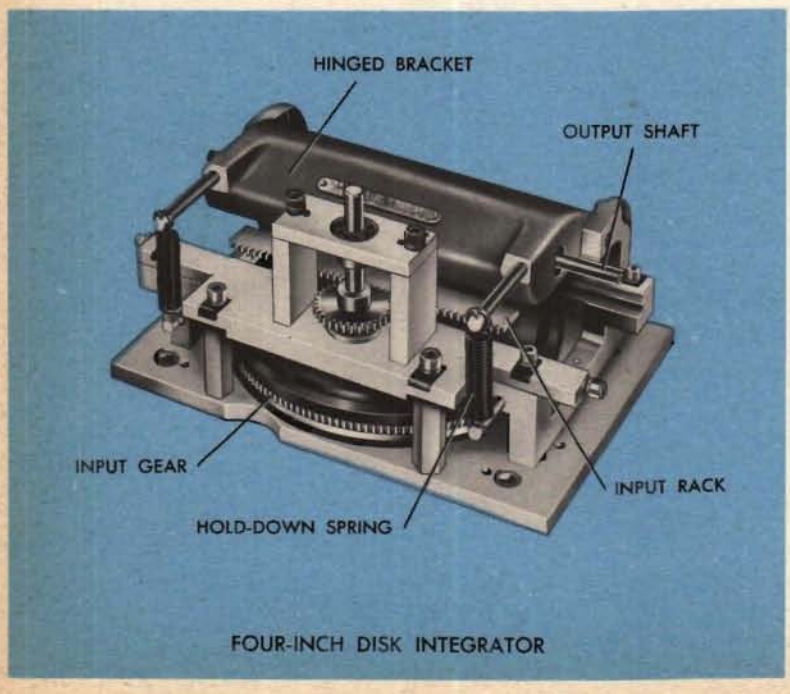

FOUR-INCH DISK INTEGRATOR

The four-inch disk integrator and the five-inch disk integrator are similar in construction and function. The inputs are carried by the disk spur gear and the carriage rack. The output is carried by the roller shaft.

The four-inch unit is more simply constructed. It does not have the tilting rollers on the ball guides nor the telescoping carriage arm which are found on the five-inch integrator. Its springs are not as strong as those on the five-inch unit because it is used for purposes which require less power. Both units operate on the same principle, however, and their working parts are alike except for size. The procedure for locating trouble is basically the same for both units.

An integrator is sometimes mounted so that the hinged bracket holding the output roller may be swung away from the disk to permit repair in place. Integrator parts are easily removed and replaced, but the final adjustment of a reassembled unit demands great care and attention.

Integrator troubles are closely related because the moving parts are held against each other by powerful springs. Jamming of one part may be accompanied by slipping of another. A scratch or burr on one surface will be transferred to all the parts with which the damaged part makes contact. Therefore in trouble shooting, when one of the balls, the roller, or the disk is found damaged, always inspect the other three parts for damage. If the unit must be removed for repair, consult the instrument OP for instructions.

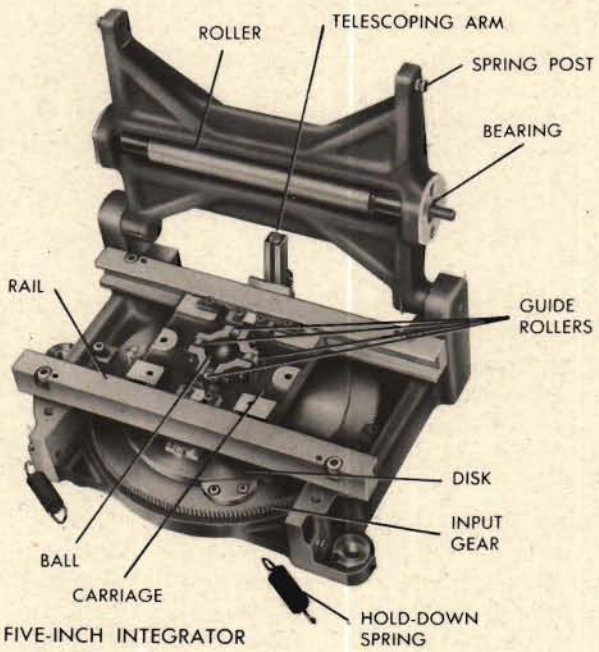

FIVE-INCH INTEGRATOR

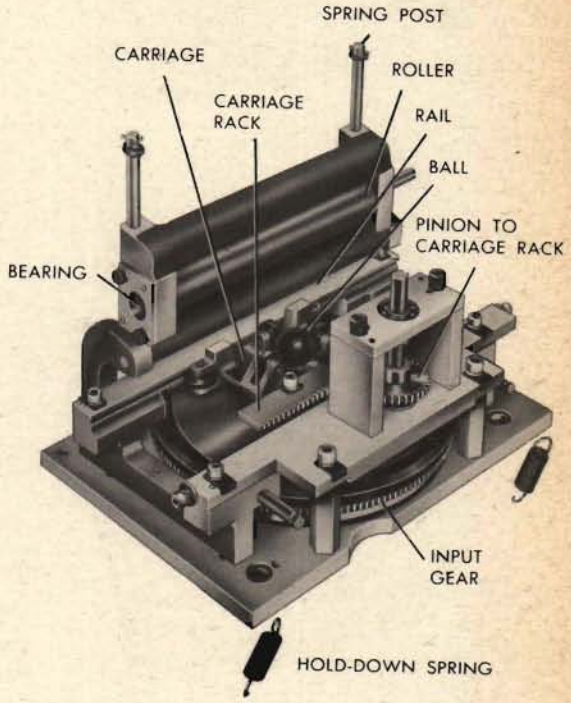

FOUR-INCH INTEGRATOR

Typical symptoms

If a test analysis and unit check tests indicate that the source of trouble in an instrument is in an integrator, clean the parts as well as possible with a solvent and inspect the unit for one or more of the typical symptoms listed below.

JAMMING: The disk, the carriage, or the output roller cannot be moved by hand.

STICKING: The disk, the carriage, or the output roller moves sluggishly, or resists moving past certain points.

EXCESSIVE LOST MOTION: Too much side play exists between the carriage and its rails, or between the balls and their guide rollers.

SLIPPING: Turning the disk and moving the carriage results in only intermittent movement of the roller shaft.

Locating the cause

Disk: jamming or sticking

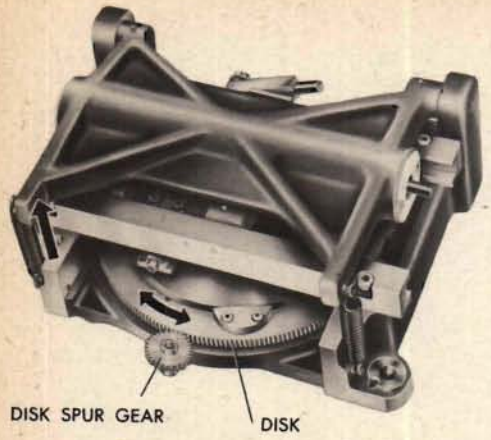

If the disk is jammed, the trouble may be in its mesh with the disk spur gear, in the disk thrust bearings, or in the disk center bearing. To check the spur gear mesh, relieve the spring tension slightly with one hand while trying to turn the disk with the other. If the disk does not turn, inspect the mesh for damage or dirt where the disk gear and the spur gear are in contact. Repair can usually be made in place. If the cause of trouble is not found in the gear mesh, the unit must be disassembled to look for dirt or damage *in the disk thrust bearing* or in the disk center bearing.

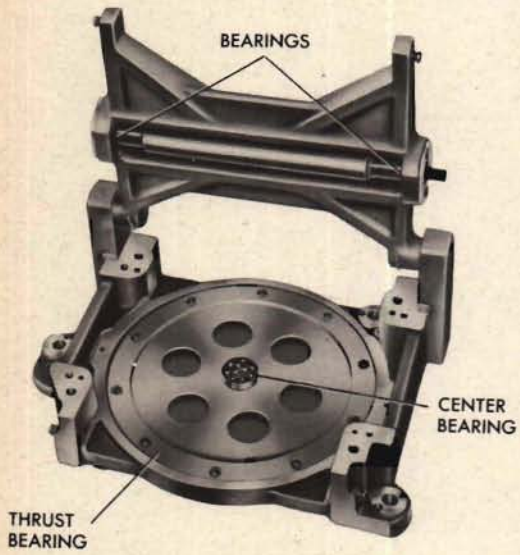

If the disk is sticking, the trouble may be caused by dirt on the disk surface, dirt or damage at the gear mesh with the spur gear, or a damaged thrust bearing or center bearing. A disk may also stick because the balls or roller are dirty or damaged.

Dirt on the disk surface is the most common cause of sticking. Clean the disk thoroughly with a lint-free cloth moistened in solvent. If there is dirt on the disk, it will also be found on the balls and roller. Clean them too. Spread a thin layer of grease over the disk surface before trying the disk for smooth operation.

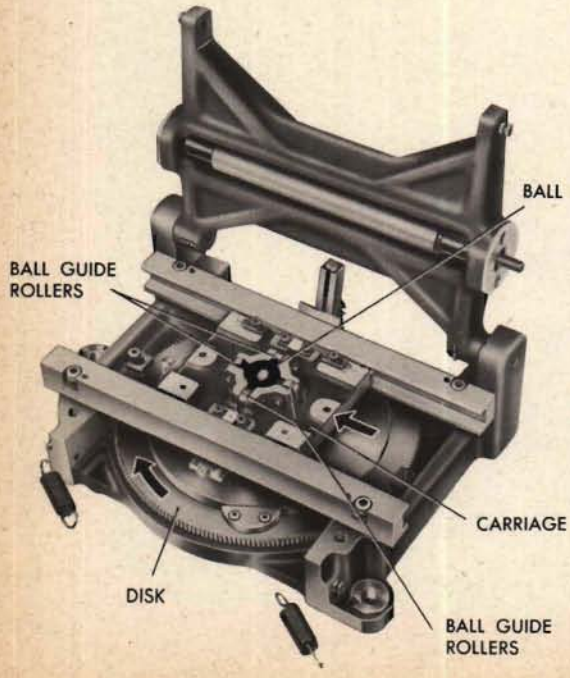

To check for other causes of sticking, turn the disk by hand with the carriage at different positions along its travel. Check the number of times the disk sticks in the course of one revolution. If the disk sticks the same number of times during each revolution regardless of the carriage position, the trouble may be caused by dirty or damaged disk gear and pinion teeth, or a damaged thrust bearing or center bearing. Sometimes the gear mesh may be checked by inspection and repaired without removing the unit. If the disk sticks only at one position of the carriage, the trouble may be caused by a dirty or damaged disk surface. If the disk sticks several times during each revolution when the carriage is farthest away from the center, fewer times when near the center, and not at all when the carriage is centered, the trouble is caused by dirty or damaged balls, guide rollers, or output roller. Repairing of any of these parts usually requires disassembly of the unit.

Carriage: jamming or sticking

If the carriage is jammed within its normal travel, the trouble may be caused by damaged rack teeth, carriage rollers, roller-tilting mechanism, or guide rails, by a frozen bearing on the carriage input pinion shaft, or by dirt in any of these parts.

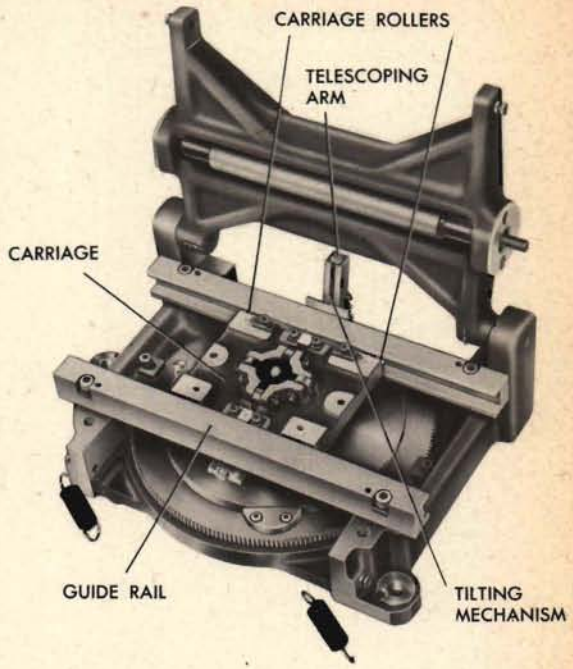

The unit must be disassembled to repair any of these parts. A bench inspection is usually necessary to determine the specific cause of the jamming.

If the carriage is sticking, the trouble may be caused by dirty or damaged carriage rack teeth, carriage rollers or guide rails, or by irregularities in the roller or the disk. All of these troubles require disassembly for repair and are best checked when the unit is on the bench.

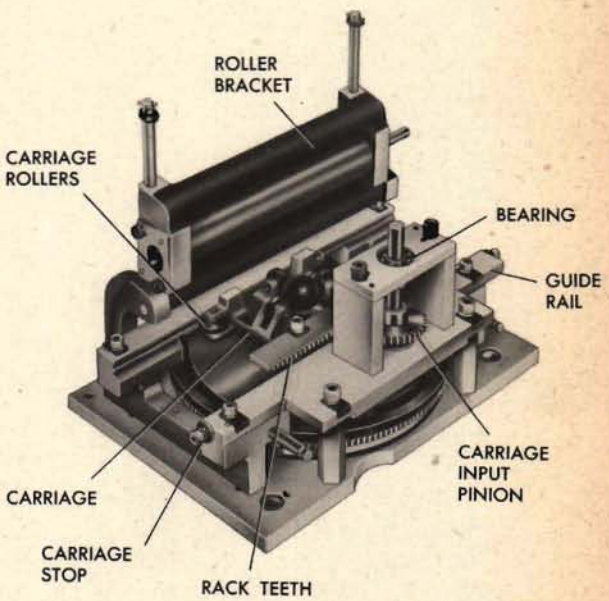

To make sure that the trouble is not caused by sticking balls when they move across a groove worn in the disk or the roller, lift the roller bracket sufficiently to relieve the spring pressure and check the carriage response by moving it the full range of its travel. Sticking caused by contact with irregularities in either the disk or the roller will not be felt when the spring pressure is removed. If the trouble is in the roller or the disk, the unit must be disassembled for repair.

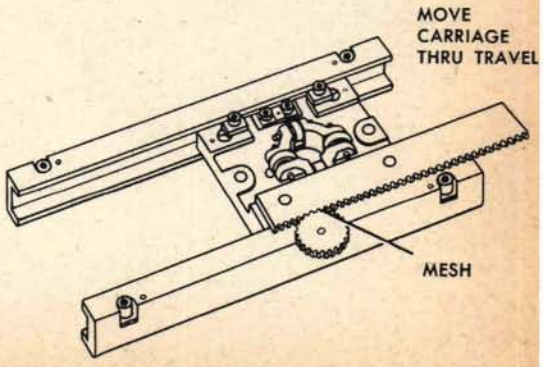

To check the mesh of the carriage rack and pinion, turn the input gear to move the carriage through the full range of its travel. Position the carriage at the tight spot and check the carriage input mesh. A tight mesh between the carriage rack and pinion will prevent the carriage from moving freely in its rails. The unit usually must be disassembled and the rack readjusted.

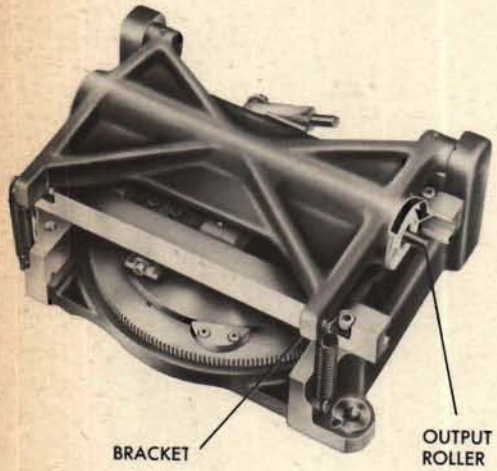

Output roller: jamming or sticking

To check for jamming of the output roller, lift the bracket against the spring tension with one hand and try to turn the output roller with the other. If the output roller cannot be turned by hand, the trouble is a dirty or damaged bearing on the roller shaft. An integrator which has been operated with a jammed output roller may also have flattened balls or a scored disk, or output roller. The unit must be disassembled to replace the damaged parts.

If the roller can be turned, but moves sluggishly or resists moving past certain points, the bearings are dirty or damaged. Check to be sure no damage has been done to the roller, balls, or disk. The unit must be disassembled to clean or replace the bearings.

Balls: jamming or sticking

The balls may jam or stick if foreign matter enters between the ball and the guide rollers. The bracket can be lifted to inspect, clean, or replace the balls.

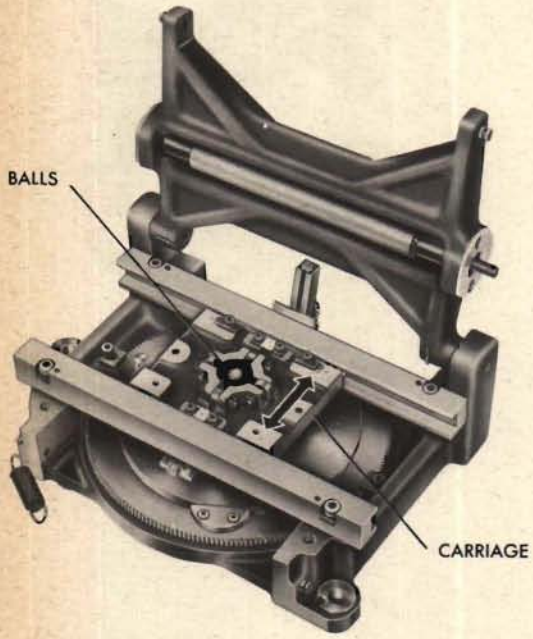

Excessive lost motion

One source of lost motion is the play between the carriage rollers and their rails or between the balls and their support rollers. To check for this lost motion, shake the carriage back and forth between the rails. If there is lost motion anywhere along the rails in excess of 0.001 inch, the unit must be disassembled for repair. Excessive lost motion between the balls and their support rollers requires disassembly and replacement of the carriage or rollers.

On the five-inch integrator, a shifted or loosened eccentric center stud will cause the integrator output to be in error, as indicated by a B test. To check for a loose center stud, inspect the bottom of the unit to see whether the stud slot has shifted from the position where it was staked.

A loose eccentric stud may cause the mesh between the disk gear and the input gear to have excessive lost motion or to jam. To adjust and stake the center stud, the unit does not need to be disassembled. The center stud of the four-inch integrator is fixed.

To inspect for worn disk, balls, and roller, the unit must be disassembled.

Slipping

The principal cause of slipping is weakness of the two hold-down springs, which may have rusted or become fatigued. To check for weak springs, move the carriage to the end of its travel away from the center. Turn the disk and try to hold the output roller. If the output roller can be easily stopped, the springs should be replaced. On the five-inch integrator, each spring should exert a pull of 9.2 pounds ±10% when in position. If the unit is on the bench, this pull can be checked by hooking a spring scale to one spring post. A pull of 17 pounds on the scale should not lift the roller bracket.

On the four-inch integrator, each spring should exert a pull of 2.75 pounds ±10%. If a pull of 5 pounds lifts the roller off the balls, replace the springs.

If there is any doubt as to whether or not the springs are weak, replace them both.

Slipping may also be caused by a loose disk. To check for a loose disk on a four-inch integrator, inspect the four special flat-head screws, to make certain that they are tight. The rolling parts may hop and slip if there is a groove or scratch on the disk, balls, or roller, or a flattened area on the balls or roller. The unit must be disassembled to inspect these parts. On the five-inch integrator it is not likely that the disk will slip on the disk gear. To check the disk, turn the disk input until the clamp that holds the disk to the gear can be reached. Tighten the two screws in the clamp. Make sure that when the clamp is tight the disk is tight. On the four-inch integrator, the four screws holding the disk in place may be tightened.

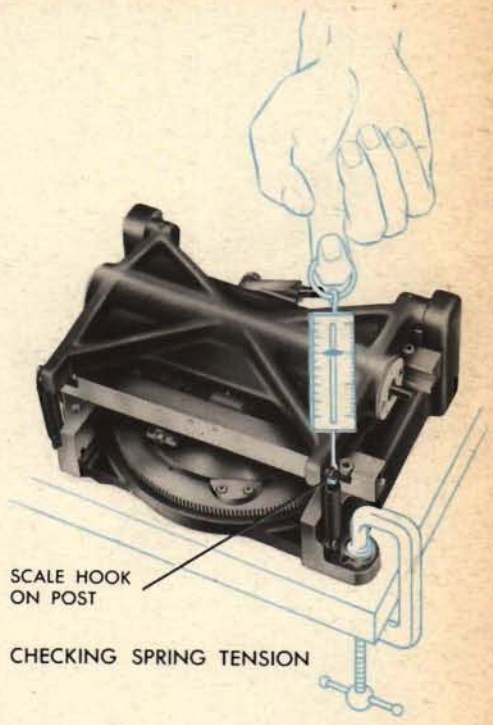

CHECKING SPRING TENSION

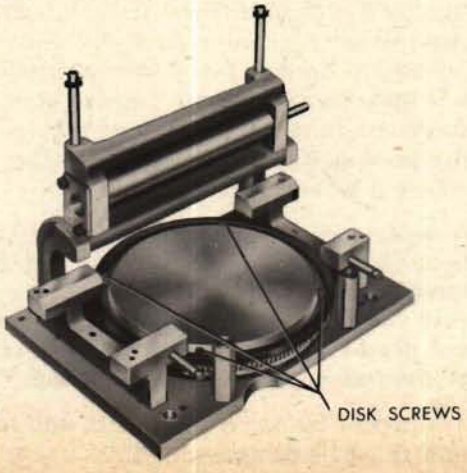

Disassembling the five-inch unit

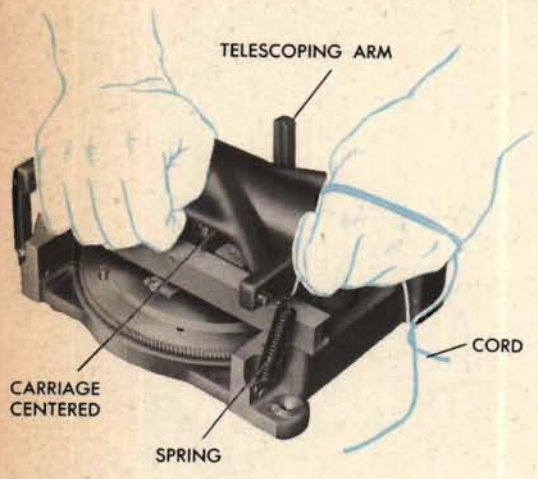

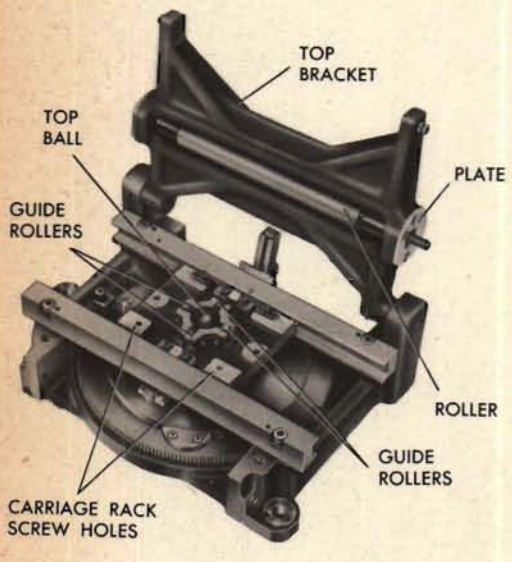

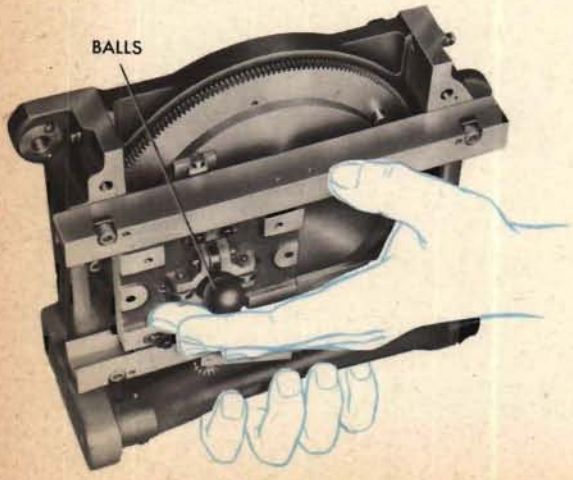

1 Place the unit flat on the bench. Insert a loop of strong cord under the top loop of one hold-down spring and lift the spring loop off the spring post. Remove the second spring in the same manner.

2 Move the carriage to the center of its travel so that the telescoping arm will not be damaged when the top bracket is swung back.

3 Swing the hinged top bracket back.

4 Use a lint-free cloth moistened with solvent to wipe the roller clean. Inspect the surface. Slowly and lightly turn the roller to check its freedom of rotation.

5 Remove the roller only if replacement or cleaning of bearings is necessary.

6 Remove the plate from the shaft extension end and tap the opposite end of the roller shaft with a light plastic hammer until it starts to move. The roller may be pushed out through the bearing hole.

7 Before removing the two balls, check for excessive lost motion between the top ball and its guide rollers. A 0.001-inch feeler gage should fit between the ball and any roller. Do not force the gage. If a 0.002-inch gage can be slipped between the two parts, the clearance is too great and should be reduced.

8 Remove the carriage rack and pinion gear.

9 Remove the balls by tilting the unit. Hold one hand over the carriage to catch the balls as they roll out.

10 Remove the screws holding both carriage rails and tap the underside of both rails lightly to raise them evenly off their dowels. Mark the front and back rails to identify them.

11 Slowly lift the rails and the carriage together.

12 Wipe the disk clean with a lint-free cloth moistened with solvent. Inspect the disk surface for irregularities. Do not remove the disk from the gear unless either one is defective, or parts below the gear require inspection or repair.

13 To remove the disk, remove the clamp that presses against the outside of the disk. The disk can then be lifted off.

14 To remove the disk gear assembly, remove the two guides and raise the gear off the center stud.

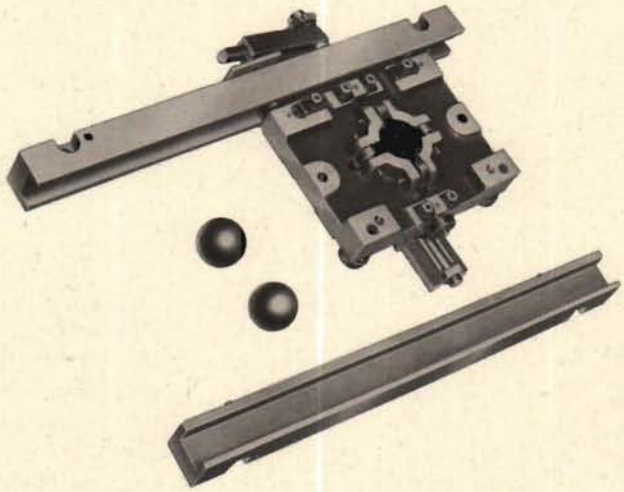

15 Lift off the ball retainer.

16 The center stud should not be removed unless a new one is to be installed. If it is loose, it can be adjusted and tightened in place.

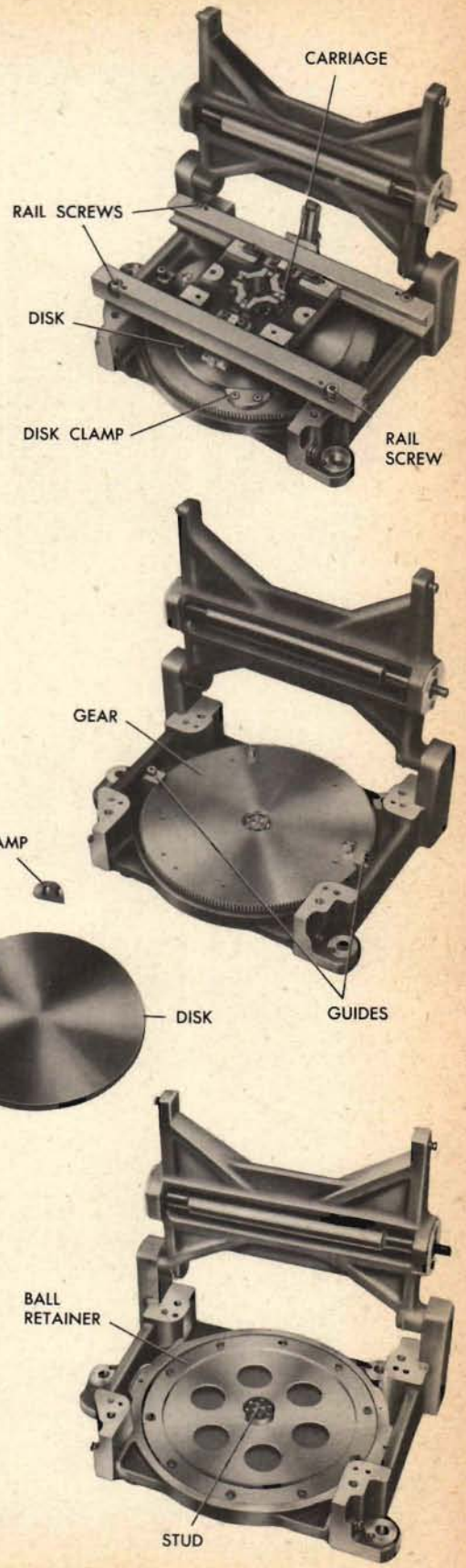

Repairing the parts: five-inch unit

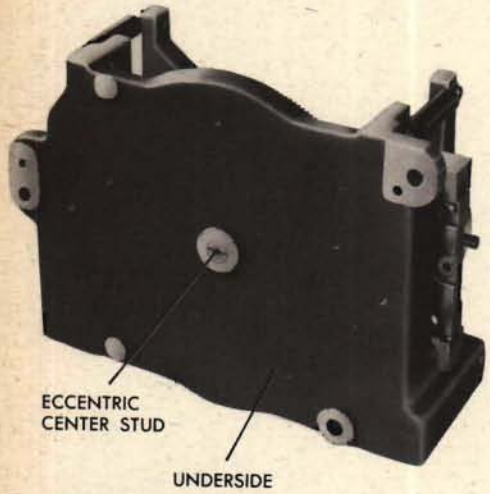

Replacing the eccentric center stud

Drill into the old stud to remove the flange. Drive out the old stud with a punch and hammer and clean the hole. Grease a new stud and insert it in the hole. Support the frame upside down, resting the assembly on a support on the stud shoulder. With a hammer lightly tap all around the raised lip to peen the lip into the countersink in the frame. Turn the stud at intervals during this process so that the stud is not tightened too much. The stud is adjusted to its final position and staked during final assembly. For a detailed explanation of removing and replacing parts which are riveted in this way, see pages 77-79.

THE BALL RETAINER

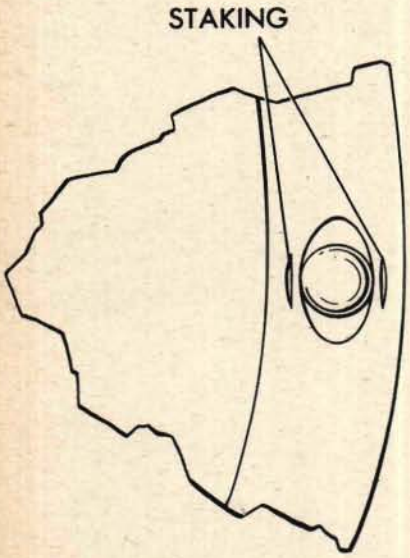

Repairing the ball retainer

Each ball in the retainer is held in its slot by staking, which keeps the ball from falling out, but allows it to move in all directions. Each ball should rotate freely. Wash and dry the retainer and look for worn or broken balls. Be particularly careful in this inspection if the ball races are damaged. Remove any chipped or scratched ball by supporting the frame around the ball and driving the ball out with a punch and a light hammer. Insert a new ball, and again supporting the frame around the ball, stake lightly in the old stake marks to retain the ball. Turn the ball to see that it is free. Place the retainer in position on the center stud. Make sure that the retainer is sufficiently flat to allow all the balls to rest on the raceway. If the retainer is bent, remove it and straighten it by hand pressure, checking straightness by eye.

Repairing the disk

Both sides of the disk may be used. Wash the disk with an approved solvent and inspect the side which has been in use. Small rust spots or hair scratches may be smoothed down by polishing them with crocus cloth wet with oil. Back the cloth with a flat steel block. Carefully inspect the center of the disk. If any depression is found there, the disk must be reversed or replaced. Turn the disk over and inspect the other side. If both sides have depressions, grooves, rough spots, or scratches, the disk must be replaced. Handle the disk only on the edges, never on the faces, because perspiration on the fingers may start corrosion. Wipe the surface with a clean lint-free cloth to prevent scratching the polished surface. Coat the underside with a film of grease.

PROPER METHOD OF HANDLING DISK

Repairing and installing new carriage rollers

Wash the carriage thoroughly with an approved solvent to remove all dirt and old lubricant from the bearing rollers. Check all rollers for smoothness. Replace rusted, rough, or sticky bearings which cannot be washed clean. The seven rollers which position the carriage on the rails may be lifted off their studs after the cotter pins have been withdrawn from the stud ends. The two fixed lower ball guide rollers may also be removed after the cotter pins have been withdrawn. The two tilting ball guide rollers and the four upper ball rollers may be taken out by removing the cotter pins and withdrawing the roller shaft. Do not lose the two spacers that fit on either side of each of these rollers. A ball guide roller having grooves on its face should be replaced.

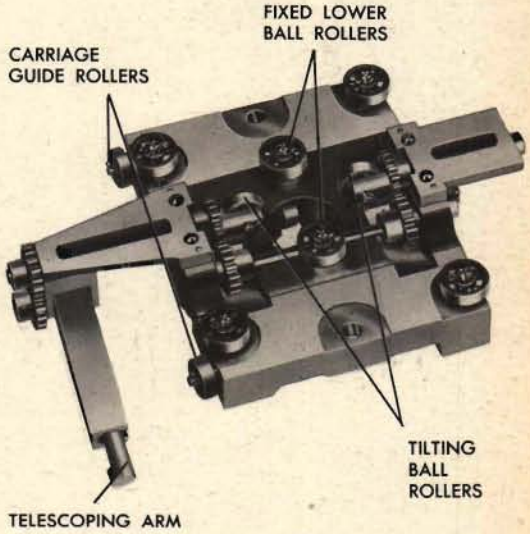

UNDERSIDE OF CARRIAGE

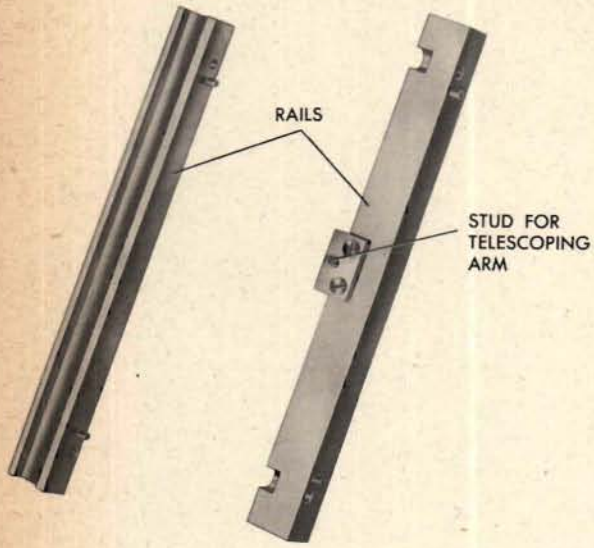

Repairing the carriage rails

Wash the carriage rails with solvent and polish them with tissue. Inspect the roller paths for dirt or damage. Check carefully for imbedded material. Put the carriage into its rails, and mount this subassembly on the casting. Test the carriage travel in the rails. The horizontal rollers should have an up-and-down play of approximately 0.001 inch. Polish rough or high spots on the rails by stroking the roller path with a square steel bar wrapped in crocus cloth. Wash the rails thoroughly after completing this work.

Repairing and replacing the carriage studs

Check for bent roller studs. To straighten bent studs, first remove the roller. Then, with the stud resting on a flat metal surface, gently tap the stud end until the stud is straight. The three vertical rollers have studs pressed into blind holes in the carriage. They are held by straight pins. To remove a stud, drive out the straight pin and pull out the stud. Fit the roller to the new stud by polishing the stud. Lubricate the stud and insert it in the hole, tapping it in with a plastic hammer. Carefully drill through the old pin hole with a drill the same size as the pin. Tap in the straight pin and stake both ends of the pin to retain it in position.

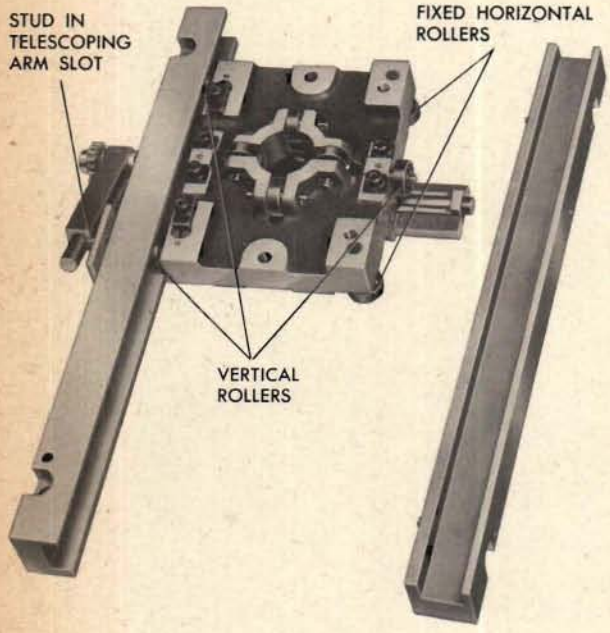

The fixed horizontal rollers, two guiding the carriage and two guiding the lower ball, are on riveted studs. To remove a riveted stud, drill out the countersunk head and drive out the shank. In riveting a new stud, the assembly must be supported at the stud shoulder. The carriage guide roller studs must have their riveted heads filed flush with the rack mounting surface.

Adjusting and replacing the roller-tilting mechanism

Move the carriage through its full travel to check the smoothness of the roller-tilting mechanism. Repair or replace damaged gears or bent shafts. All parts on the shaft assemblies are held with straight pins. If the gear meshes are too tight, reposition the gears. Excessive lost motion in the gear meshes of the roller-tilting assembly is not critical. A roller may be replaced by removing one cotter pin and withdrawing the roller shaft. Do not lose the two spacers which position the roller in its fork.

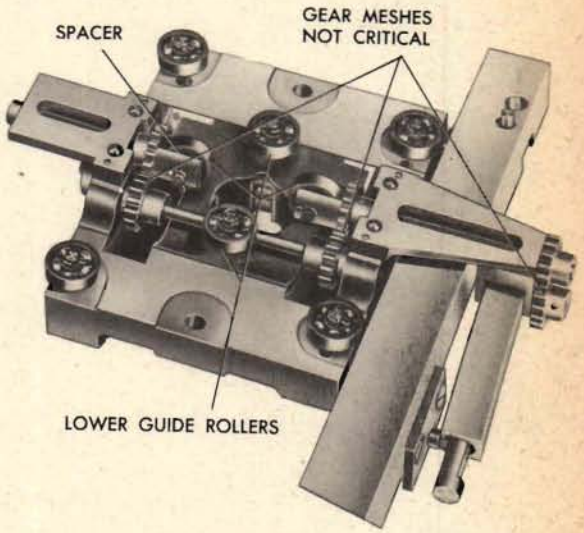

ROLLER-TILTING MECHANISM (UNDERSIDE)

Reducing excessive lost motion between the lower ball and its guide rollers

Excessive lost motion between the lower ball and its guide rollers can sometimes be eliminated by replacing the rollers. On a new unit this lost motion does not exceed 0.0008 inch, but through use and lack of lubrication, these rollers may develop play.

If replacing rollers does not reduce excessive lost motion sufficiently, it can be eliminated, in the case of the tilting rollers, by changing spacers. THIS METHOD IS NOT RECOMMENDED AS STANDARD PRACTICE AND SHOULD NOT BE USED UNLESS AN EMERGENCY JUSTIFIES IT, AND THEN ONLY AS A TEMPORARY REPAIR UNTIL A REPLACEMENT CARRIAGE ASSEMBLY IS AVAILABLE.

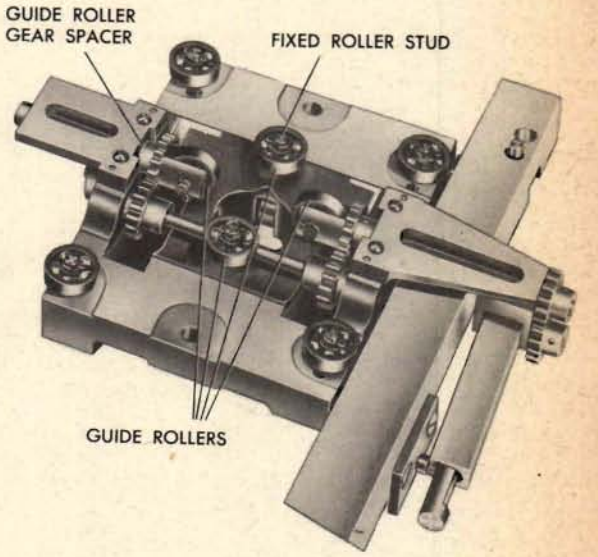

A tilting roller may be moved toward the ball by using a thicker spacer behind the guide-roller gears, but the spacer on the other end of the shaft must be reduced correspondingly. Always move both rollers in equal distances.

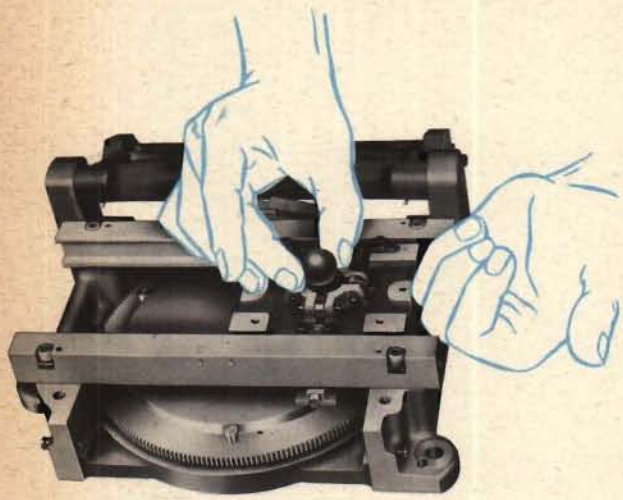

REPLACING BALLS
IN THE CARRIAGE

To move a fixed roller stud slightly towards the ball, tap it gently after the roller is removed.

To check the clearance of these rollers, mount the carriage on the rails. Slip one finger between the carriage and disk so that it reaches the hole. Drop the lower ball on the finger, and slowly remove the finger until the lower ball touches the disk. Failure to follow this procedure may result in denting the disk.

When the ball is in place, insert a feeler gage between the ball and guide roller. Clearance should be not more than 0.001 inch.

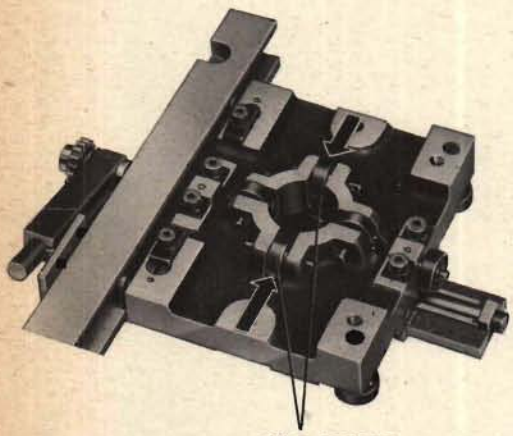

GUIDE ROLLERS

Reducing excessive lost motion between the upper ball and its guide rollers

Excessive lost motion between the upper ball and its guide rollers can sometimes be eliminated by replacing the rollers. On a new unit this lost motion does not exceed 0.0008 inch. Through use and lack of lubrication these rollers may have developed play. If replacing the guide rollers does not sufficiently reduce lost motion, moving the roller shafts closer to the ball will reduce it further. The shafts on opposite sides of the ball must be moved equal distances to maintain the vertical alignment of the balls.

To reposition a roller shaft, take the carriage from the rails and remove the roller and the shaft. Using a round needle file, enlarge the hole slightly by filing towards the center of the carriage. A few strokes of the file should be sufficient; do not file too much. Replace the roller and shaft. Mount the carriage on the rails.

Slip one finger between the carriage and disk so that it reaches the hole. Drop the lower ball on the finger, and set the upper ball on top of the lower one. Slowly remove the finger until the lower ball touches the disk. Failure to follow this procedure may result in denting the disk.

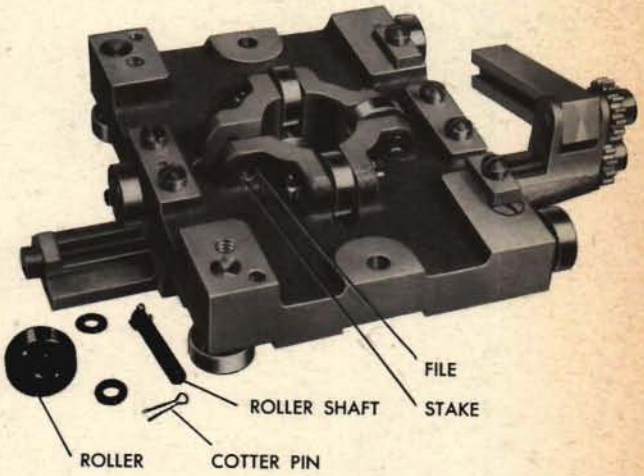

When the balls are in place, press the roller shaft toward the upper ball and insert a feeler gage between the ball and guide roller. Clearance should be not more than 0.001 inch. Repeat the filing and checking procedure until lost motion is sufficiently reduced.

Remove the balls from the carriage and the carriage from the rails.

With the shaft in place, stake the carriage metal on the side of the shaft farthest from the ball, using a small round punch and a light hammer. This flows the metal of the carriage into the enlarged hole and holds the shaft in place. Tap gently and uniformly to avoid breaking the metal.

NOTE:
If the shafts are bent, the holes too much enlarged, or the lost motion of the ball over 0.002 inch, the carriage must be replaced.

Adjusting the carriage on its rails

Place a drop of oil in each of the carriage roller bearings and position the vertical rollers of the carriage on both rails. Be sure that the pin attached to the rear rail is in the slot of the telescoping arm. With the carriage in position between the rails, set the rails on the integrator frame with the dowels directly above the dowel holes. To lower the rails evenly into position, tap them lightly above the four dowels. Insert and tighten the rail screws.

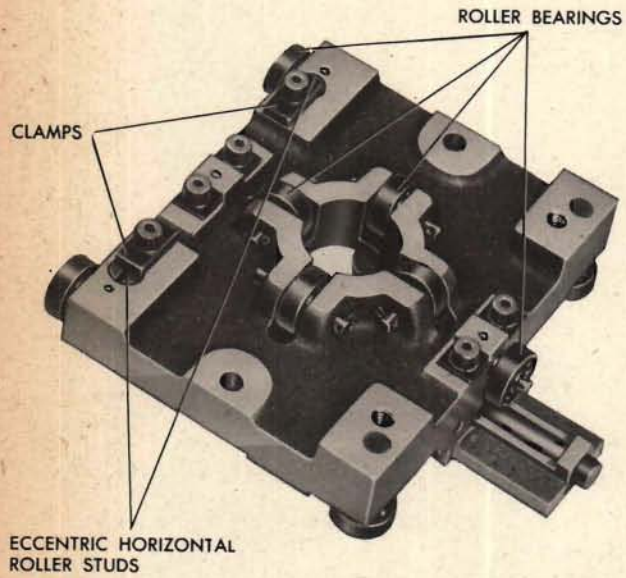

Move the carriage through its full travel, checking its side play all along the rails. This side play should be less than 0.001 inch; it can be controlled by turning the two eccentric horizontal studs. If there should be excessive side play of the carriage at one end of its travel and none at the other, one of the rails must be repositioned and redoweled.

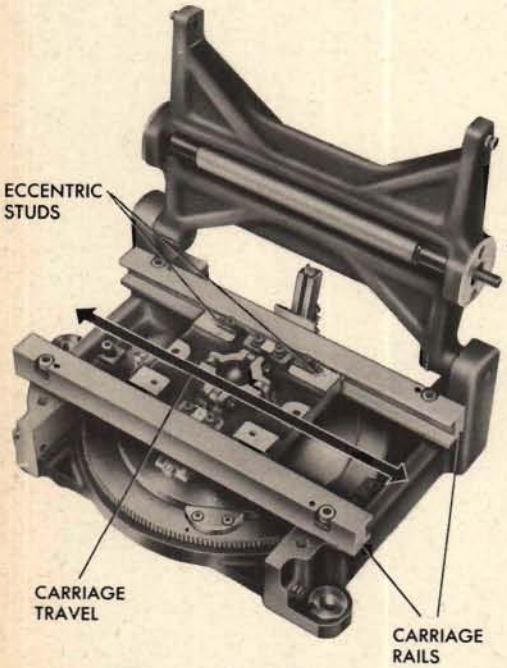

Mount the input gearing assembly on the integrator frame. Hold the carriage against the rail, away from the eccentric studs, and move it through its travel to check the carriage-rack gear mesh for binding. If this carriage position causes excessive binding, it is necessary to move and redowel the rail nearest the mesh. If the mesh is satisfactory, the eccentric studs can be adjusted by loosening the flat clamps above them and turning the studs.

Repositioning the rails

The rails must be parallel to each other and to the output roller axis. Also, when the carriage moves through its full travel, the centers of the balls should pass directly under the output roller axis.

Remove both rails and the carriage. Carefully drive the dowels out of the rail to be moved and then replace the rails and carriage in the unit. Replace the rail screws. Shift the rail without dowels until the balls, rails, and roller are in the relative positions described above. If the up-and-down motion of a spring post is at a minimum when the carriage is run through its full travel, the rails are parallel to the roller axis. (Measure spring-post motion with a dial indicator.) While positioning the rails, if too much side play develops between the carriage and the rails, reduce it by adjusting the eccentric carriage roller studs. If the mesh between the carriage rack and pinion is disturbed, reposition the rack. Tighten the rail screws and redrill the old dowel holes for oversize dowels. While drilling, protect the disk and carriage rollers with tissue.

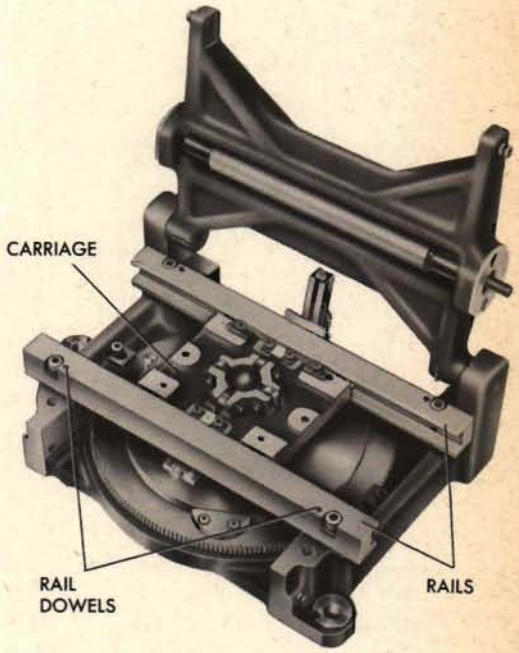

Positioning the carriage rack

Remove the carriage rack and drive out the dowels. Mount the rack loosely in place. Mount the carriage input gearing assembly on the frame. Position the rack to obtain a smooth mesh with minimum lost motion throughout the carriage travel. Set the screws tight and remove the carriage. Protect the rollers while drilling and reaming for oversize dowels. Dowel the rack to the carriage. Replace the carriage in its rails and recheck the mesh.

Repairing and replacing the output roller

Because the outside diameter of the roller is finished to an exact dimension to obtain the required unit output, the output roller cannot be ground or refinished to remove grooves, flats, or scratches. It should be replaced. Small rough spots, hair scratches, and rust may be smoothed by polishing the surface.

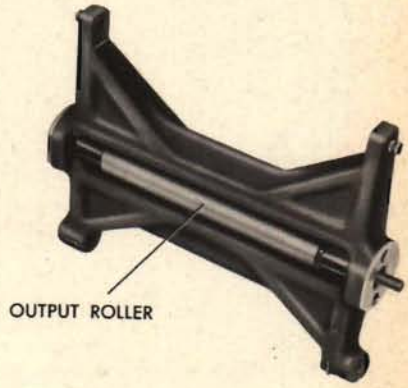

Reassembling the five-inch unit

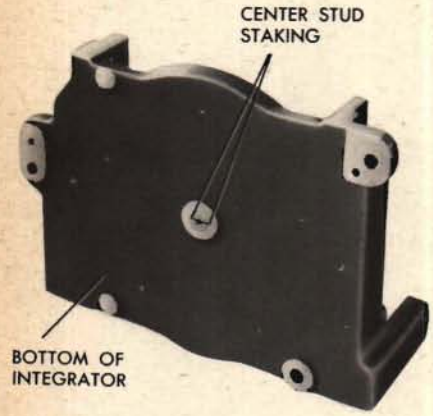

Before reassembling the unit, wash the parts with an approved solvent and dry them. Put a drop of oil in each ball bearing. Apply a thin film of grease to the roller, disk, balls, and rails.

1 Inspect the staking of the center stud to determine whether the stud has been turned from its original position. With a screw driver check the tightness of a new center stud, or one which has been turned from its original position. To tighten a loose stud, turn the frame upside down and support the assembly on the stud shoulder. Using a light hammer, tap uniformly around the stud flange until considerable force is required to turn the stud. Do not stake a new stud or one which has been turned, until the final adjustment has been made, after complete assembly.

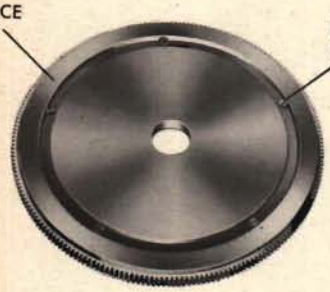

2 Wash the upper and lower ball races in solvent and dry them with a clean, lint-free cloth. Look for rust or scratches in the path traveled by the balls. Hair scratches or rust spots may be smoothed by polishing. Cover the races with a thin film of grease before replacing the ball retainer.

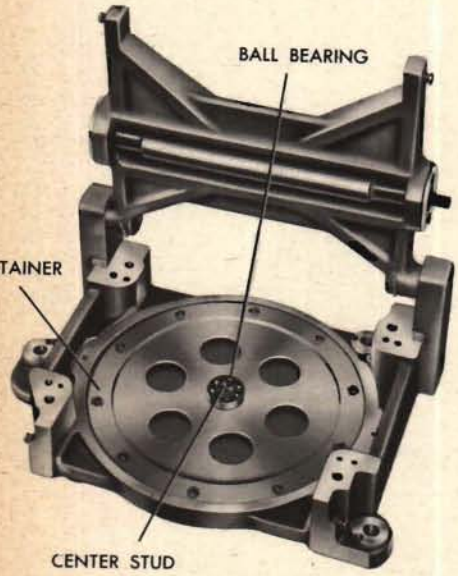

3 Place the ball retainer on the center stud.

4 Place the ball bearing on the center stud above the retainer.

5 Place the disk spur gear on the center stud bearing.

6 Handle the disk only on the edges, never on the faces, because perspiration in the pores of fingers is sufficient to start corrosion of the disk. Wipe the surface with a lint-free cloth to prevent scratching the polished surface. Coat the underside with a film of grease. Place the disk on the disk gear.

7 Turn the disk until the flat is opposite the two clamp screw-holes in the gear, and replace the disk clamp. Make sure that the disk is tightly in place when the clamp is tight.

8 Reinstall the two disk guides. Coat the disk with a thin film of grease. Turn the disk gear slowly to check for freedom and smoothness of rotation. Spin the disk. It should spin to a gradual stop.

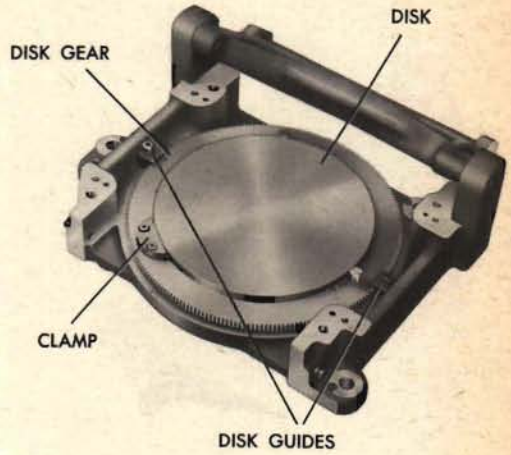

9 Position the rails on the carriage rollers and secure the telescoping arm.

10 Mount the carriage and rails on the casting, lowering the rails evenly by tapping the dowels into the holes.

11 Run the carriage through its full travel. Check to be sure that the side play is less than 0.001 inch.

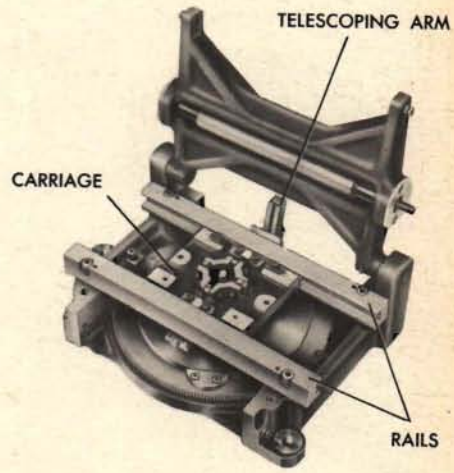

12 Slip one finger between the carriage and disk so that it reaches the hole. Drop the lower ball on the finger, and set the upper ball on top of the lower one. Slowly remove the finger so that the lower ball makes contact with the disk.

13 Insert a feeler gage between the upper ball and each guide roller and check to see that clearance is not more than 0.001 inch.

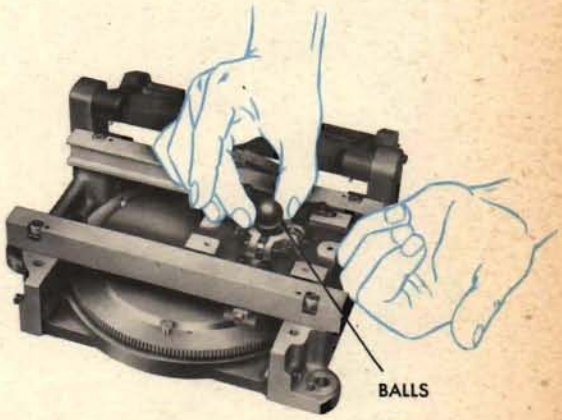

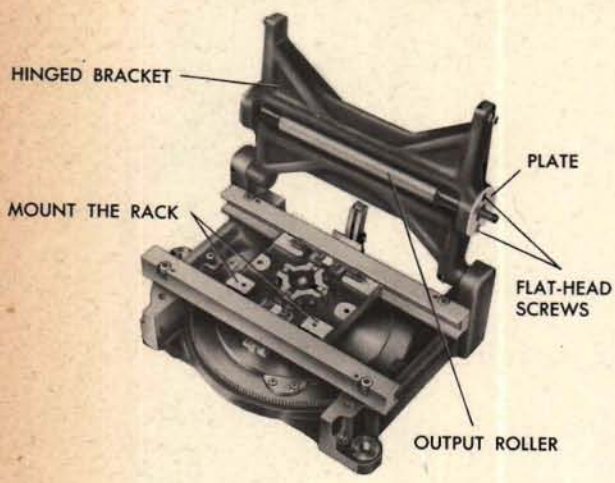

14 Mount the rack on the carriage. Mount the pinion gear.

15 Wash and inspect the output roller bearings and mount the roller and bearings in the hinged bracket.

16 Mount the plate.

17 Stake the flat-head screws to keep them from working loose.

18 Spin the roller to check for smoothness of operation.

19 Spread a thin layer of grease on the roller.

20 Lower the hinged bracket into position.

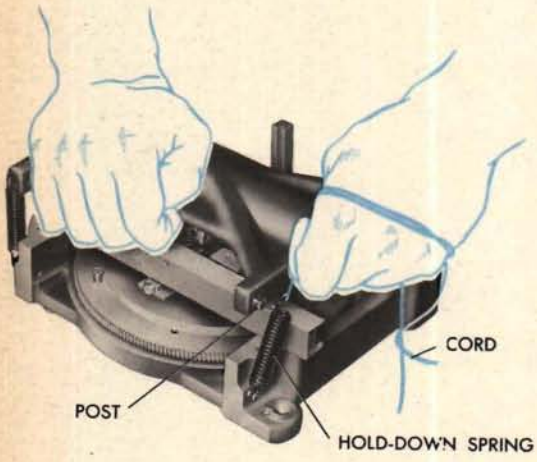

21 Hook one hold-down spring over the lower spring post. Pass a loop of strong cord through the upper spring loop and raise the spring until it can be hooked over the upper spring post. Install the second spring in the same way.

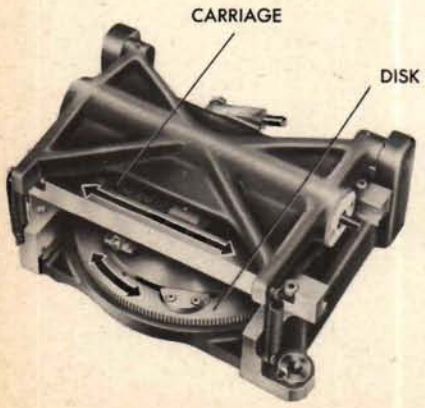

22 Move the carriage through its travel and turn the disk to check the unit for smooth operation.

Adjusting for zero output

Turn the disk and adjust the carriage position until the output roller movement is at a minimum. Wedge the carriage in this position by placing a wedge between the rack and the rail. Turn the disk to recheck the carriage position after wedging. Turn the disk in the opposite direction. If the balls are at dead center on the disk, the roller will not turn. If the roller movement cannot be stopped by repositioning the carriage, the eccentric center stud on the bottom of the unit should be turned a few degrees. Try again to reposition the carriage to obtain a zero output which remains stable when the disk is turned first in one direction and then in the other. Repeat the operation of turning the stud slightly and repositioning the carriage until a stable zero output is obtained. Then stake a small amount of metal into the slot in the stud to prevent the stud from turning. Remove the wedge.

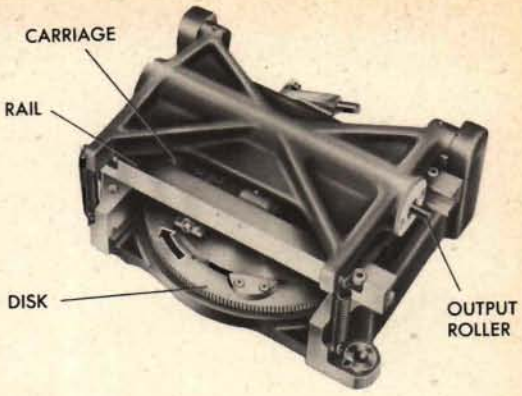

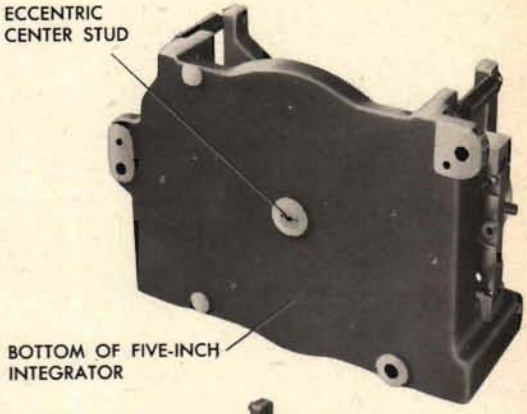

Bench checking the unit

Before reinstalling, check the assembly of the unit against the assembly drawing. See also that the following requirements are met:

1. A force of 1/2 ounce will move the carriage through its entire travel when the roller bracket is lifted.
2. Side motion of the carriage between its rails does not exceed 0.001 inch.
3. The disk clamp prevents the disk from slipping on the disk spur gear.
4. Balls, roller, and plate are free of pits, grooves, rust, or scratches.
5. A thin coating of grease has been applied to the disk and roller. The bearings have been oiled.
6. The hold-down spring tension is 18.4 pounds $\pm 10\%$.
7. The roller does not bind in its bearings when the unit is placed in different positions.
8. When the carriage is centered, a zero output is obtained for both directions of disk rotation.
9. Use an indicator to make sure that the up-and-down movement of a spring post does not exceed 0.020 inch when the carriage is moved through its normal path of travel.

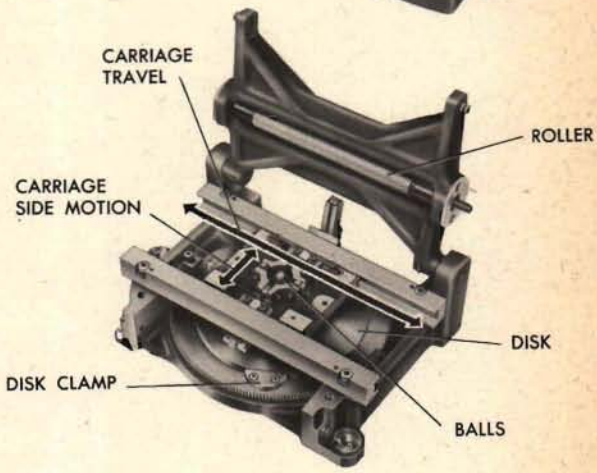

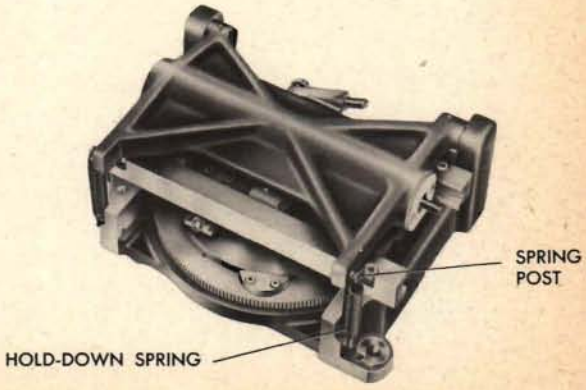

Disassembling the four-inch unit

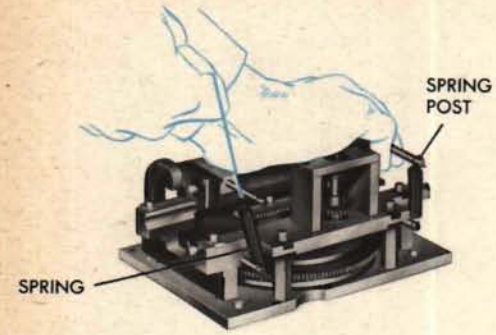

1 Unhook the hold-down springs from the upper spring posts.

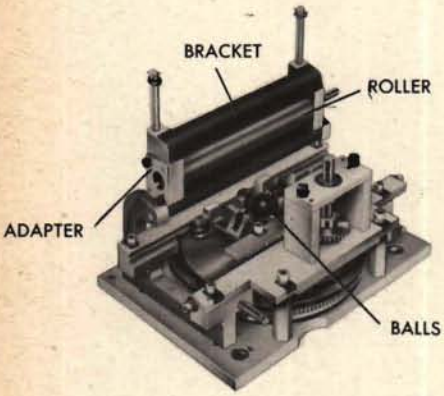

2 Raise the roller carriage bracket.

3 Wipe the roller, using a lint-free cloth moistened with solvent. Inspect the surface. *Spin* the roller to check for freedom of rotation.

4 If roller replacement or repair is necessary, remove the roller by taking out the adapter at the end opposite the shaft extension. Lightly tap the shaft extension end of the roller with a plastic hammer to start moving the adapter out of the roller bracket. Carefully *pry* the adapter out. Withdraw the roller through the adapter hole in the bracket.

5 Before removing the two balls, check for excessive lost motion between the balls and their guide rollers. Try to insert a 0.001-inch feeler gage between each roller and the ball. Do not force the feeler gage. The clearance between the rollers and the ball should be less than 0.001 inch. If the gage slips freely between the parts, the clearance must be reduced.

6 Remove the balls by tilting the unit while holding one hand over the carriage to catch the ball.

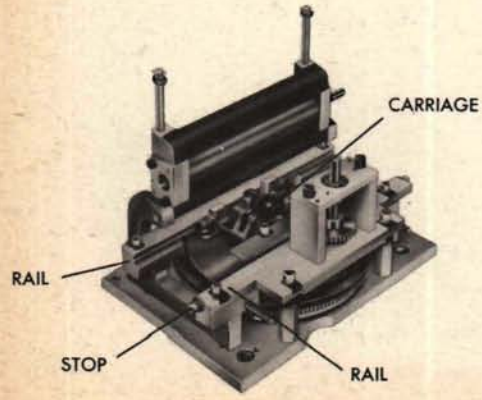

7 Remove the stop from one end of the carriage rail.

8 Slide out the carriage. Do not remove the carriage rack unless a new rack is required.

9 Remove the screws holding the rails, and tap the rails up to withdraw the dowels.

10 Wipe the disk clean with a lint-free cloth moistened with solvent. Inspect the disk surface. Do not remove the disk from the gear unless one is defective.

11 Remove the disk by taking out two of the special tapered-head screws that clamp the disk.

12 Slide the disk and clamping ring out toward the rear of the integrator.

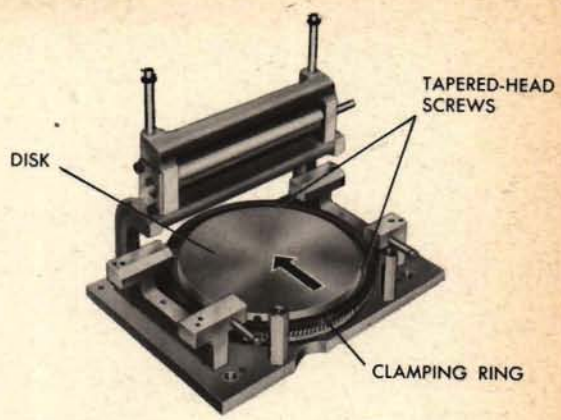

13 Lift off the disk spur-gear assembly.

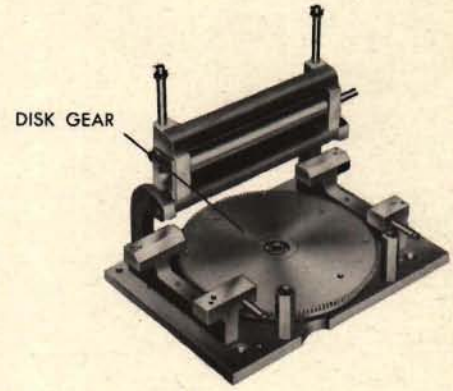

14 Lift the ball retainer off the center stud.

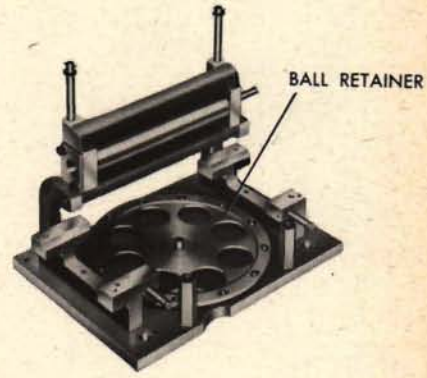

15 Do not remove the center stud unless a new stud is required.

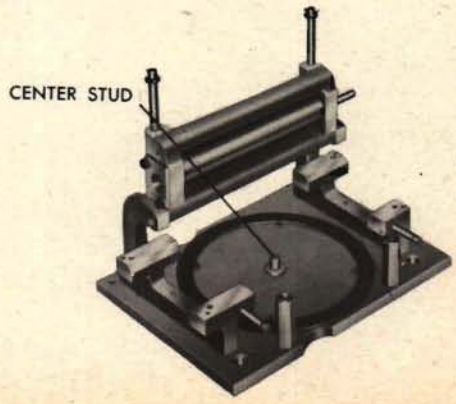

Repairing the parts: four-inch unit

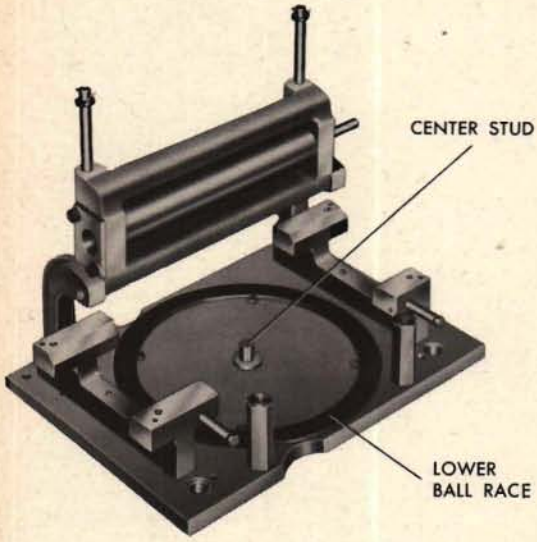

Tightening the center stud

The center stud in a four-inch disk integrator is concentric. Inspect the stud to be sure it is tight. To tighten the stud, turn the plate upside down, rest the stud shoulder on a support, and tap the flanged end of the stud evenly into the countersink in the plate, using a light ball-peen hammer.

Replacing the center stud

Use a center drill to remove the riveted flange of the old stud. Support the plate around the stud, and drive out the stud with a punch and hammer.

Polish the new stud to fit the center bearing and insert the stud in the plate hole. Support the stud shoulder, and tap the flanged lip into the countersink until it is flush with the plate. For a detailed explanation of removing and replacing parts riveted in this way, see pages 77-79.

BALL RETAINER

Repairing the ball retainer

(See page 294.)

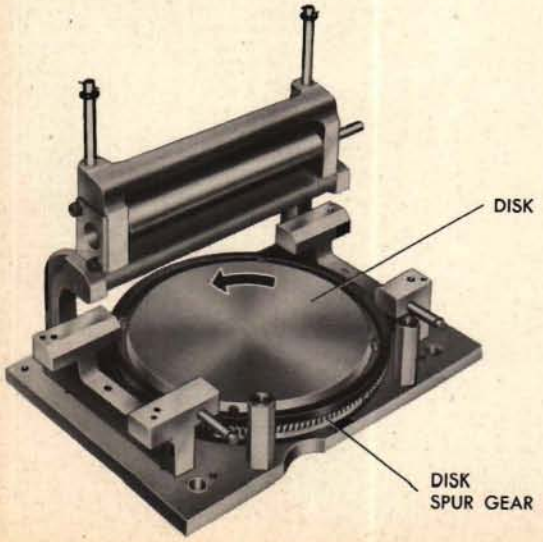

Repairing the disk

Rust or hair scratches may be smoothed by polishing the surface with crocus cloth and oil. Inspect the center of the disk. If any depressions are found here, the disk must be replaced. Place the disk on the gear, against the screws. Put on the ring and replace the four screws. Lubricate the ball race with grease and mount the gear on the stud. Turn the disk slowly to check freedom and smoothness of rotation. Spin the disk. If it does not spin to a gradual stop, look for jammed balls in the retainer, or a faulty center bearing.

Repairing the carriage rails

Wash the carriage rails and clean the roller paths with tissue. Remove any embedded material. Check the straightness of the roller paths. If the rails are bent, replace them.

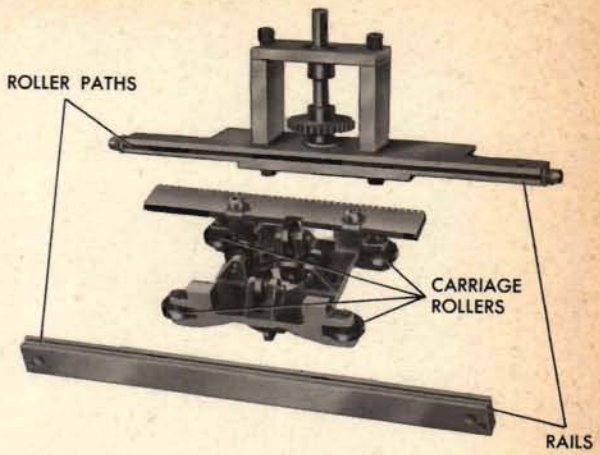

Try the carriage on the rails to check the fit of the rollers on the roller paths. The rollers should have an up-and-down play of approximately 0.001 inch. Removing excessive lost motion here requires replacement of the worn parts. If necessary, polish rough or high spots by stroking the roller path with a steel bar wrapped in crocus cloth. Wash the rails thoroughly after completing this work.

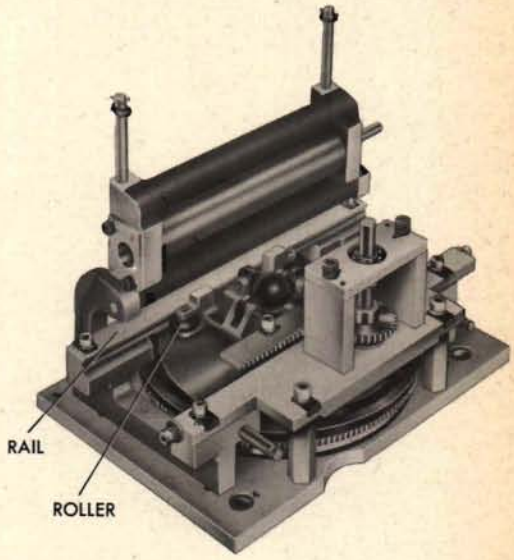

Repairing and replacing the carriage rollers

Wash all dirt and old lubricant from the carriage rollers with solvent. Check the rollers for smooth rotation. Rough or sticking rollers and rollers with grooves or other damage should be replaced.

All carriage rollers are mounted on small shafts having flared ends which hold the shafts in position. Never drive out a shaft without first filing one end to remove the flare.

Lubricate the new shaft and mount the roller and shaft on the carriage. Support the spread end of the shaft on a block. Using a center punch, flare the other end of the shaft to hold it in place. After flaring, make sure that the shaft has no play in its mounting.

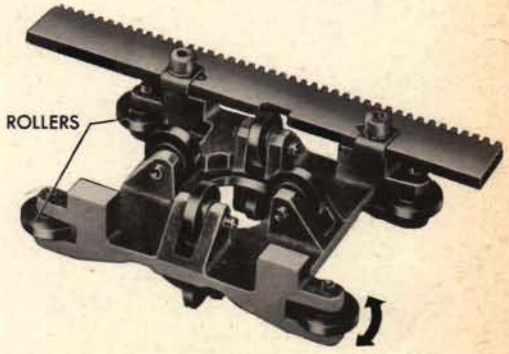

TOP VIEW OF CARRIAGE AND ROLLERS

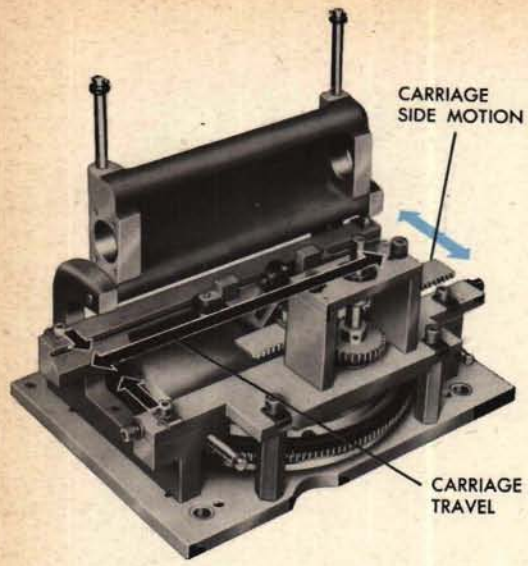

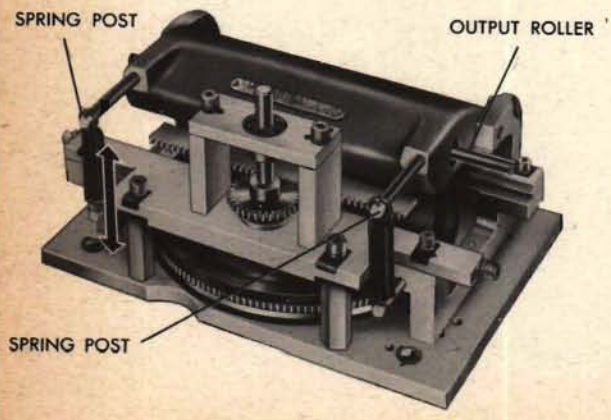

Reducing lost motion between the carriage and the rails

Mount the two rails and slide the carriage in place. Try the carriage in the rails for side play throughout its normal travel. On a new unit, the maximum side play is 0.001 inch. Excessive lost motion which is equal along the entire length of the rails can be corrected by moving the rails closer together. Remove the carriage and the rails. Drive the dowels out of both rails. Replace the rails and insert the rail screws, but do not tighten them. Replace the carriage. Both rails should then be positioned so that there is no excessive lost motion between them and the carriage. The rails must be aligned so that, as the carriage moves through its full travel, the centers of the balls move directly under the output roller axis and across the center of the disk.

To make this alignment, replace the balls, being careful not to drop them into the hole. Gently lower the output roller on its hinge until it touches the upper ball. Mount the springs. Position the rails so that, when the carriage is moved through its normal travel, the output roller moves up and down as little as possible. The maximum allowable movement is 0.020 inch. To measure up-and-down movement, use a dial indicator attached to the base with the pointer touching the end of one spring post.

At the same time make sure that the balls in the carriage roll over the center of the disk. When the carriage is centered and the disk is turned, there should be no motion of the output roller.

Side motion between the carriage and rails should not exceed 0.001 inch. After the carriage has been positioned correctly, tighten the screws. Remove the carriage and redowel the rails. Use oversize dowels or drill new dowel holes.

Reducing lost motion between the balls and ball guide rollers

Excessive lost motion between the balls and their guide rollers may sometimes be eliminated by replacing the rollers. On a new unit this lost motion does not exceed 0.001 inch, but through use and lack of lubrication these rollers may have developed side play.

If changing the rollers does not reduce excessive lost motion sufficiently, a second method may be employed: repositioning the roller shaft. THIS METHOD SHOULD BE USED ONLY IN EMERGENCIES, HOWEVER, AND EVEN THEN ONLY AS A TEMPORARY REPAIR UNTIL A REPLACEMENT CARRIAGE ASSEMBLY IS AVAILABLE.

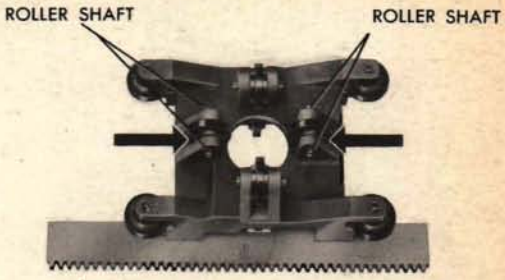

Repositioning a roller shaft

When it is necessary to move the shafts to decrease lost motion, both shafts must be moved equal distances to maintain the vertical alignment of the balls.

Remove the carriage from the rails. Remove the roller by driving out the shaft with a punch. Using a rat-tail or needle file, make the shaft hole slightly oval by filing the side toward the center of the carriage. Replace the roller and shaft and mount the carriage in the rails. Put in the balls, press the shaft toward the balls, and check for lost motion. When one half the lost motion has been eliminated, stake metal into the hole to hold the shaft in its new position closer to the ball. Secure the shaft in position by flaring its ends with a center punch. Reposition the opposite shaft in the same manner, eliminating the remainder of the excess lost motion.

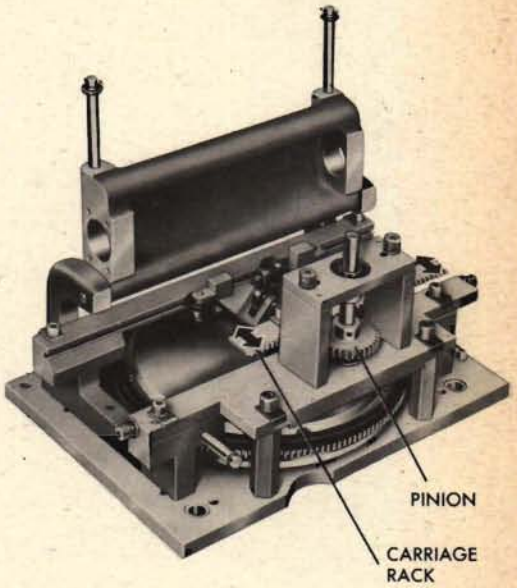

Positioning the carriage rack

Before positioning the carriage rack for proper mesh with the input pinion, the lost motion between the carriage and the rails must be checked and, if necessary, reduced. The carriage rack should then be positioned. To do this, remove the rack from the carriage and drive out the old dowels. Replace the rack on the carriage and position the rack until the correct mesh is obtained throughout the carriage travel. Tighten the screws. Remove the carriage with the rack in its new position, and redowel the rack, using oversize dowels in the old dowel holes. Wash the carriage and put a drop of lubricating oil on each roller shaft. Slide the carriage into the rails and recheck the carriage rack mesh.

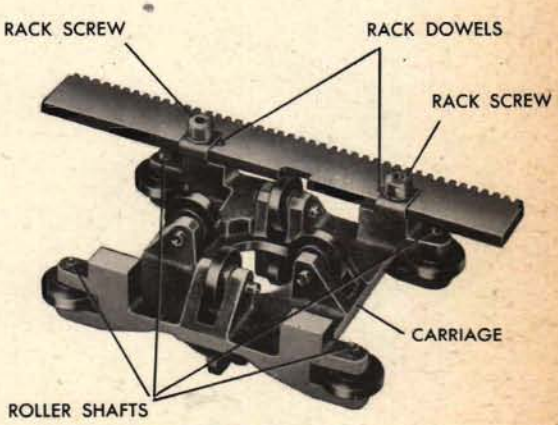

Reassembling the four-inch unit

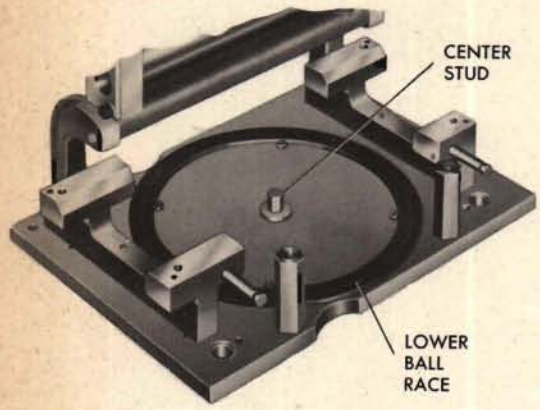

Wash all the parts in an approved solvent and dry them before beginning reassembly. Put a drop of oil in each bearing.

1 Check the tightness of the center stud.

2 Inspect the upper and lower ball races for rust or scratches. Hair scratches or rust spots may be smoothed by polishing. Wash the surfaces thoroughly in solvent after polishing. Cover the races with a thin film of grease before replacing the ball retainer.

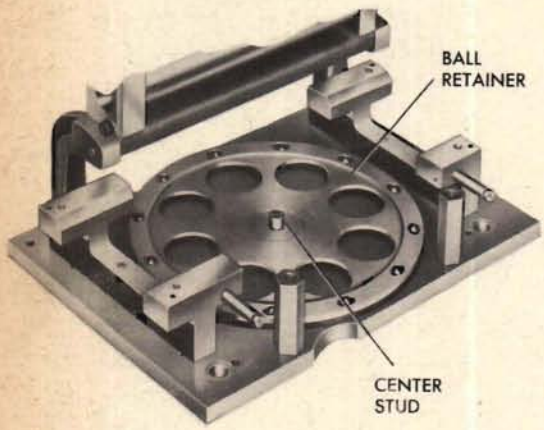

3 Replace the ball retainer on the center stud.

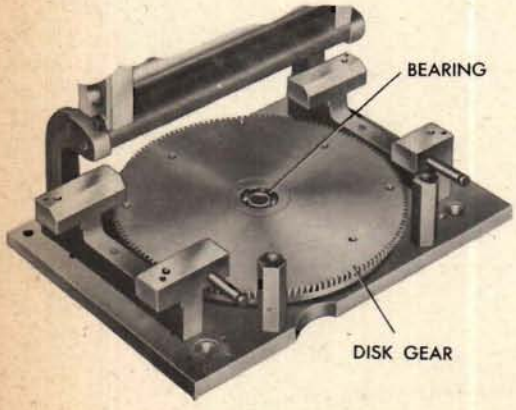

4 Replace the bearing on the center stud above the retainer.

5 Replace the disk spur gear on the center stud bearing.

6 Replace the disk and disk clamping ring together. Handle the disk only on the edges, never on the faces, because perspiration in the pores of fingers is sufficient to start corrosion of the disk. Wipe the surface with a lint-free cloth to prevent scratching the polished surface. Coat the underside with a film of grease.

7 Tighten the four screws on the clamping ring to secure the disk. Make sure that the disk is tightly in place when the clamp is tight.

8 Coat the disk with a thin film of grease. Turn the disk gear slowly to check for freedom and smoothness of rotation. Spin the disk. It should spin to a gradual stop.

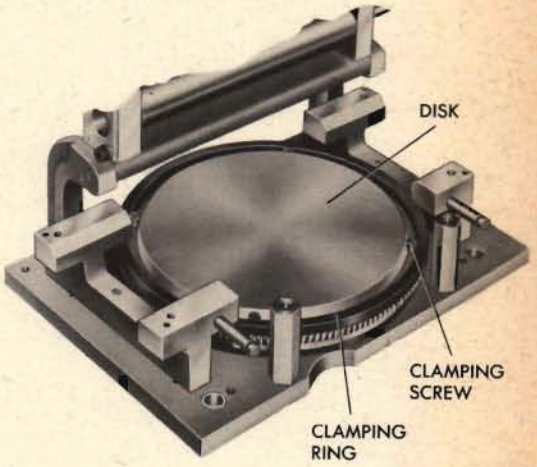

9 Mount and adjust the rails.

10 Slide in the carriage.

11 Check the carriage rack and pinion mesh, and the freedom of the carriage in the rails.

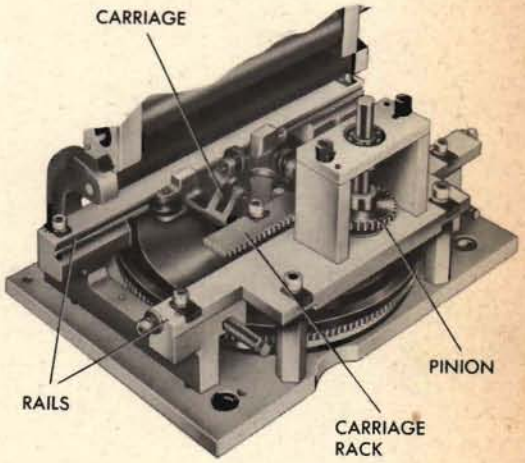

12 Slip one finger between the carriage and disk so that it reaches the hole. Drop the lower ball on the finger and set the upper ball on top of the lower one. Slowly remove the finger so that the lower ball makes contact with the disk. Failure to follow this procedure may result in denting the disk.

13 Insert a feeler gage between the upper ball and each guide roller to make sure that the clearance is not more than 0.001 inch.

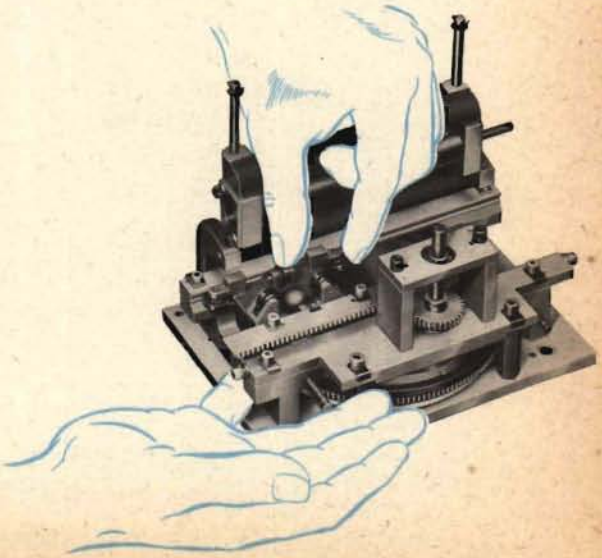

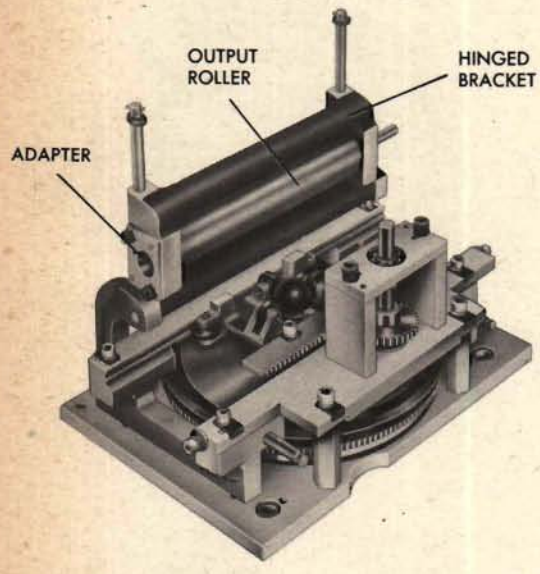

14 If the output roller was removed, mount it and one of its bearings in the hinged bracket.

15 Mount the adapter containing the other bearing for the output roller.

16 Spin the roller to check for smoothness of operation.

17 Spread a thin layer of grease on the roller.

18 Lower the hinged bracket into position.

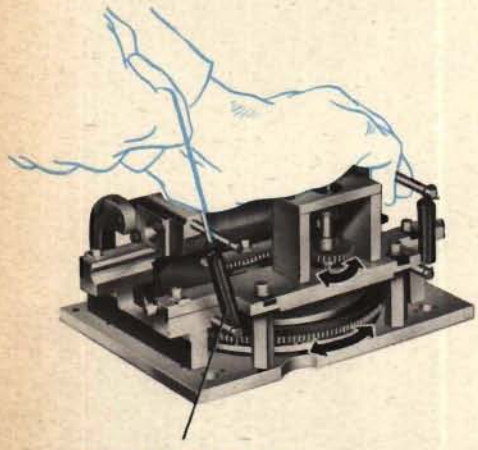

19 Hook one hold-down spring over the lower spring post. Pass a loop of strong cord through the upper spring loop and raise the spring until it can be hooked over the upper spring post. Install the second spring in the same manner.

20 Move the carriage through its travel and turn the disk to check the unit for smooth operation.

Bench checking the unit

Before reinstalling the unit, check the assembly of the unit against the assembly drawing. See also that the following requirements are met:

1 The clearance between the balls and the rollers should be less than 0.001 inch.

2 The side motion of the carriage between the rails should not exceed 0.001 inch.

3 The carriage should move freely through its normal travel.

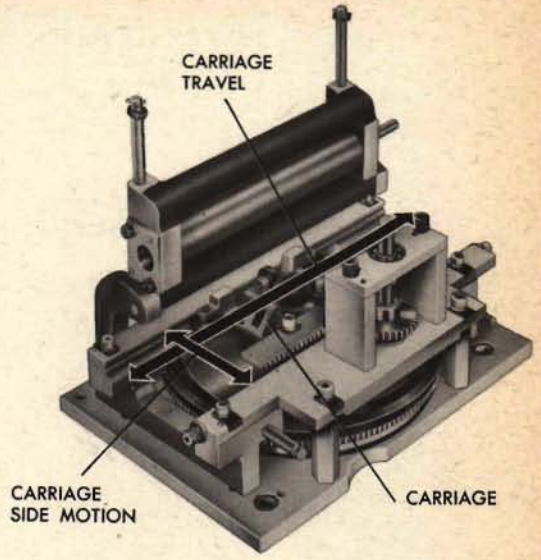

4 The clamp screws should be sufficiently tight to prevent the disk from slipping on the spur gear.

5 The balls, roller, and disk should be free of marks, flats, or scratches.

6 Be sure that a thin coating of grease has been applied to the disk and roller, and that the bearings have been oiled.

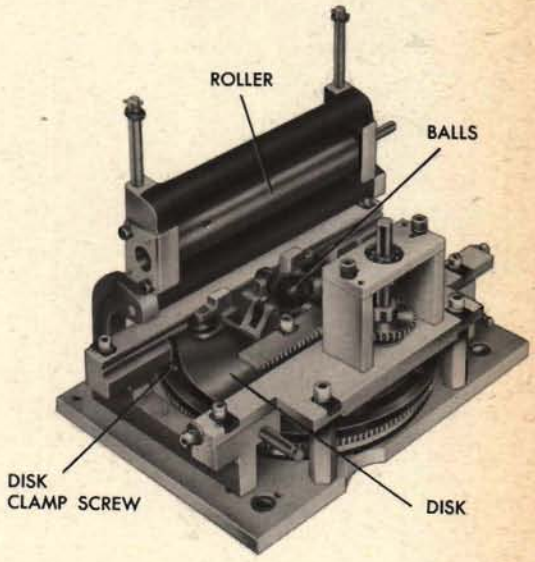

7 Measure the hold-down spring tension by attaching a spring scale to one upper spring post. The required spring tension is 5.5 pounds $\pm 10\%$.

8 Use an indicator to make sure that the up-and-down movement of an upper spring post does not exceed 0.020, when the carriage is run through its full travel.

9 Both inputs should turn freely when the unit is held in various positions.

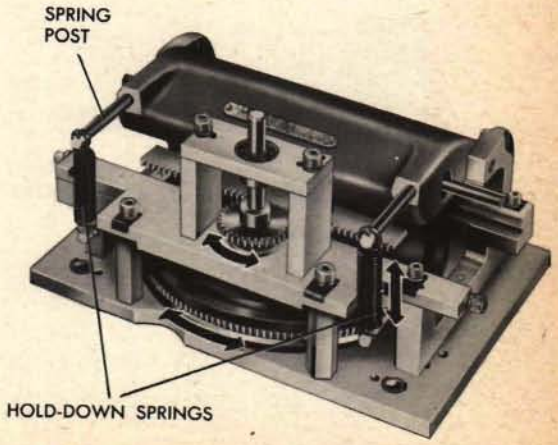

COMPONENT INTEGRATORS

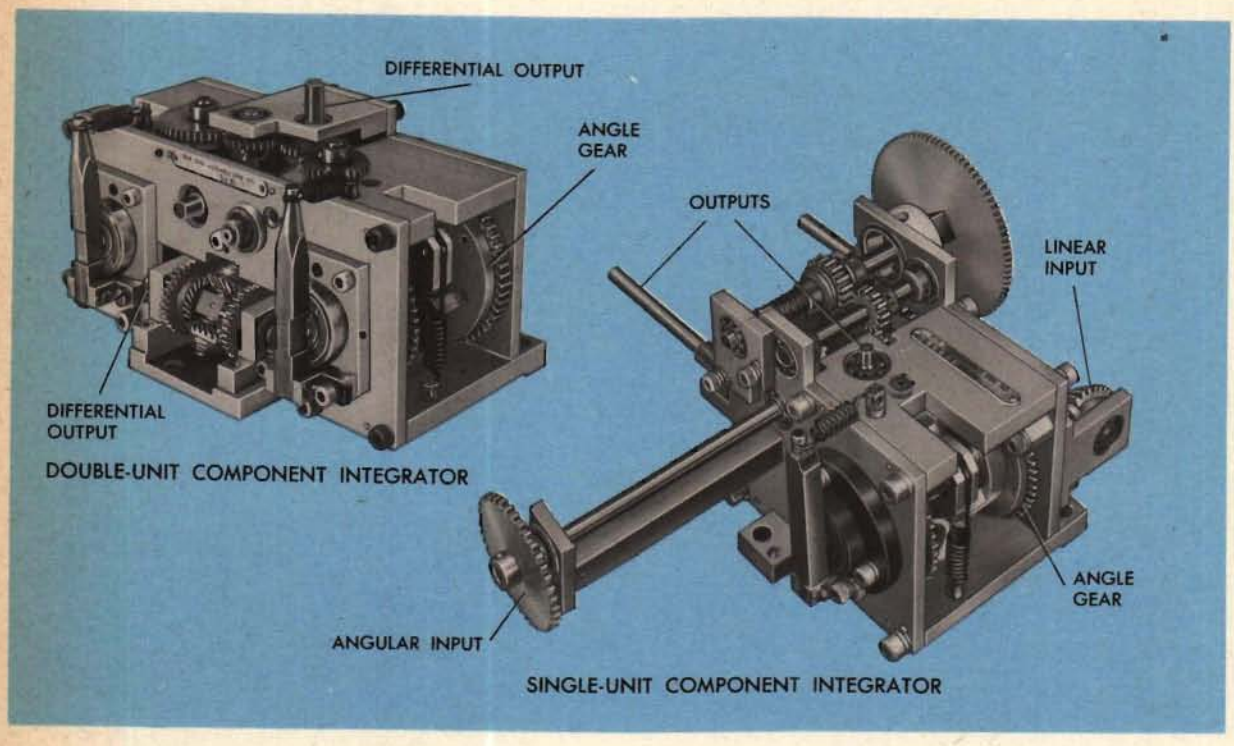

Component integrators are mounted singly or in pairs. An integrator mounted alone is a single-unit component integrator. A double-unit component integrator consists of two single integrators and two differentials in one mounting.

A component integrator has two inputs and two outputs. The two outputs are carried by two roller shafts. The linear input is carried by the roller shaft mounted on the angle gear. The other input positions the angle gear. Driving friction is provided by two spring-loaded pressure rollers which press a ball against the input and output rollers.

In a single-unit, the outputs are connected directly with the instrument.

In a double-unit, one output of each integrator is an input to one of the differentials. The other two outputs are the inputs to the second differential.

Single and double-unit integrators are self-contained units, mounted between two pairs of parallel plates. A complete unit can usually be removed by loosening the screws holding the bottom plate, although some adjacent gearing and mechanisms may have to be taken out first. If the unit must be removed for repair or replacement, consult the instrument OP for instructions.

Typical symptoms

If a test analysis and the unit check tests show an integrator is not operating normally, look for the following symptoms:

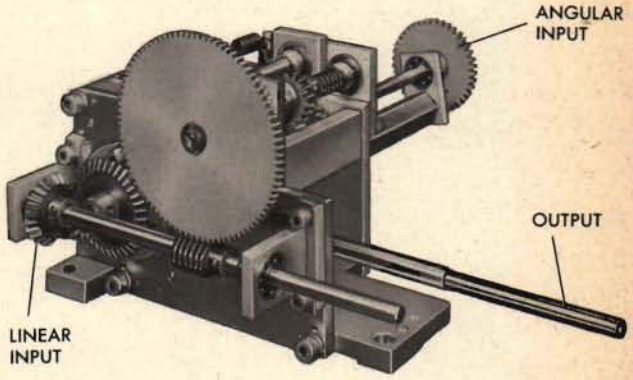

SINGLE-UNIT REAR VIEW

JAMMING: The linear input shaft or the angular input shaft cannot be turned by hand.

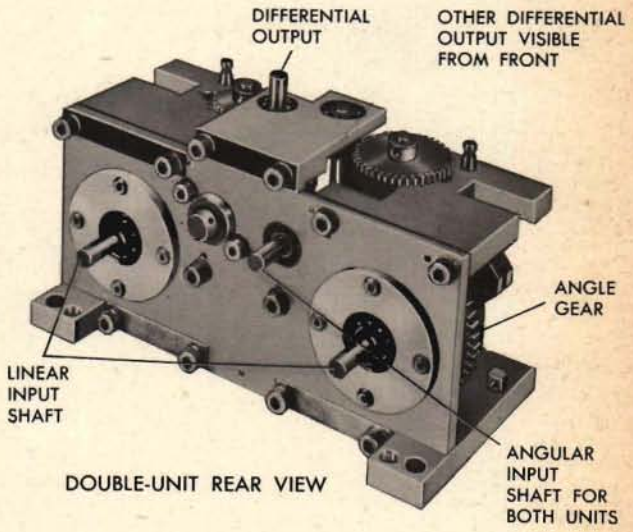

DOUBLE-UNIT REAR VIEW

STICKING: The linear input shaft or the angular input shaft resists turning past a certain point or points, or turns sluggishly. (Component integrator lines normally turn more stiffly than other shaft lines because the balls and rollers are under spring pressure.)

EXCESSIVE LOST MOTION: There is too great a lag between the turning of the linear input shaft and the output shafts, or between the angular input shaft and the angle gear; or the end play in the roller shafts is excessive.

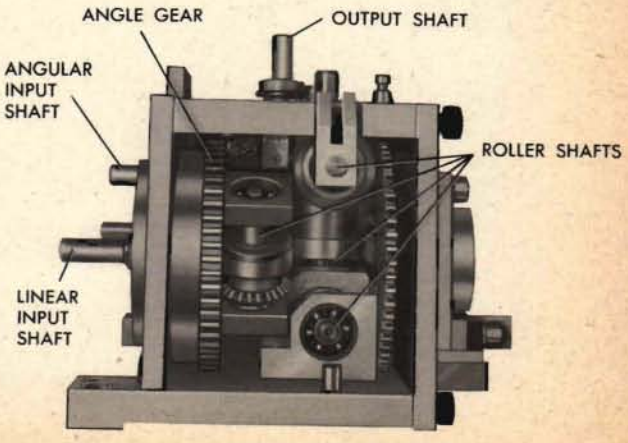

SLIPPING: Turning the linear input shaft turns the output shafts only intermittently, or not at all. (The unit is designed to produce no output when only the angular input is turned.)

Locating the cause

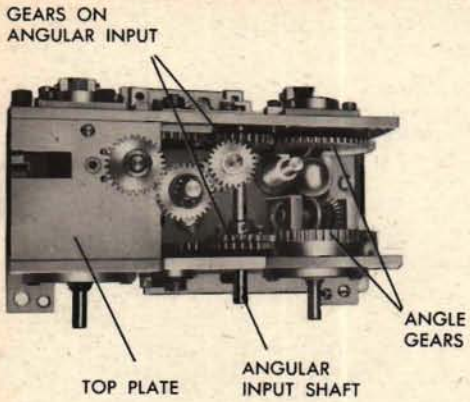

DOUBLE-UNIT–PLATE REMOVED

Jamming and sticking

If the angular input shaft jams or sticks, inspect, for dirt or damage, the two spur gears on the shaft and the two angle gears with which they mesh. These gears can sometimes be cleaned in place, but if one needs to be replaced, the integrator must be removed and disassembled.

If the linear input shaft will not turn or tends to stick, look for dirt or damage in the integrator bevel gears and the output gears which mesh with the differentials. These gears can sometimes be cleaned in position but must be removed for replacement.

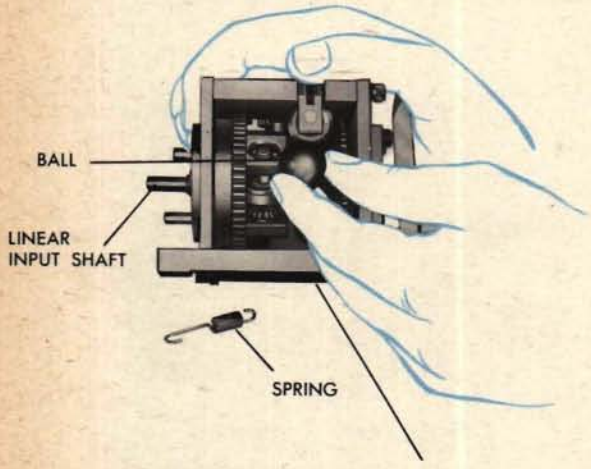

DOUBLE-UNIT–SPRING REMOVED

If the linear input shaft is jammed but all the gears are clean and undamaged, the trouble may be due to dirt or damage on the surface of a roller or ball, or to a dirty or damaged bearing which supports one of the rollers. In order to locate the source of trouble, unhook the springs and lift out and examine the ball.

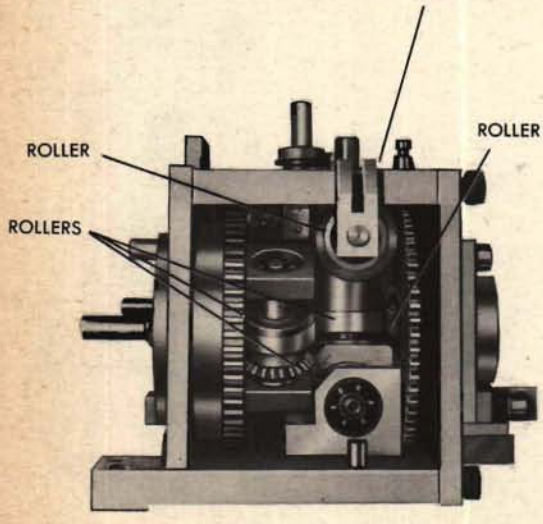

If the ball is damaged, one or more of the rollers probably is damaged too. The input and output rollers must be precision-ground to the diameter given on the assembly drawing, and for this reason should be replaced in case of damage. A damaged ball should be replaced for the same reason.

To locate faulty bearings, try to turn each roller by hand. If a roller will not turn, one of its bearings probably is dirty or damaged and should be cleaned or replaced. To clean or replace such a bearing, the roller must be removed.

Excessive lost motion

Excessive lost motion may be caused by worn gears, shaft end play, and, in the double unit, by worn differential gear teeth.

Inspect all gears for wear, and replace any that are worn enough to cause excessive lost motion. The unit must be disassembled in order to replace these gears.

Examine each roller shaft for excessive end shake. If it exceeds the allowable maximum, the spacers on that shaft may be worn or may have been incorrectly reassembled. To replace a spacer, the unit must be at least partially disassembled.

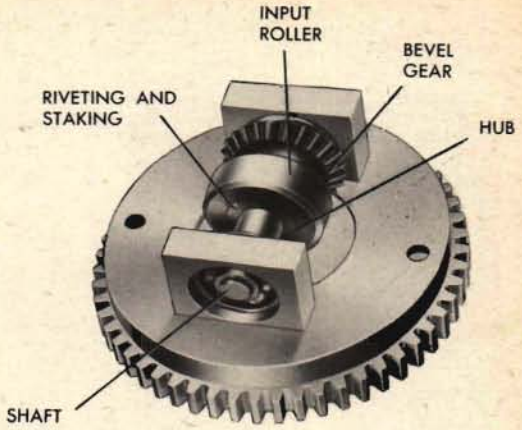

A DOUBLE-UNIT ANGLE GEAR

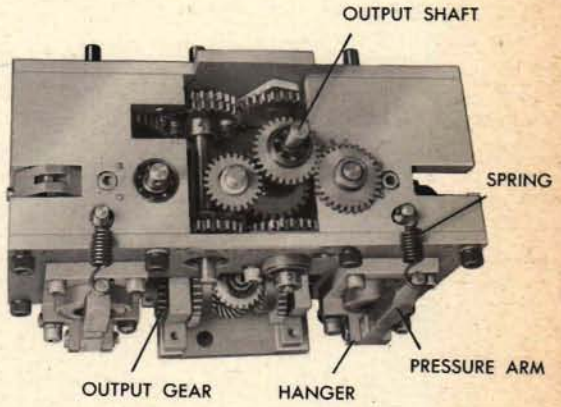

Slipping

If the output shafts slip when the linear input shaft is turning and the angular input shaft is in such a position that both outputs should turn, the cause may be insufficient friction due to stretched or broken springs, or a pressure arm frozen in its hanger. Springs and pivots can be disassembled for repair or replacement without disassembly of the unit.

If the input roller does not turn when the linear input shaft is turning, look for a missing bevel-gear pin, a missing hub and shaft wire, or a roller slipping on its hub. If a roller slips on its hub, the riveting and staking is not holding.

In order to repair a gear, replace a wire, or rivet and stake a roller to a hub, the unit must be disassembled. To rivet a roller to a hub, refer to pages 77 and 79.

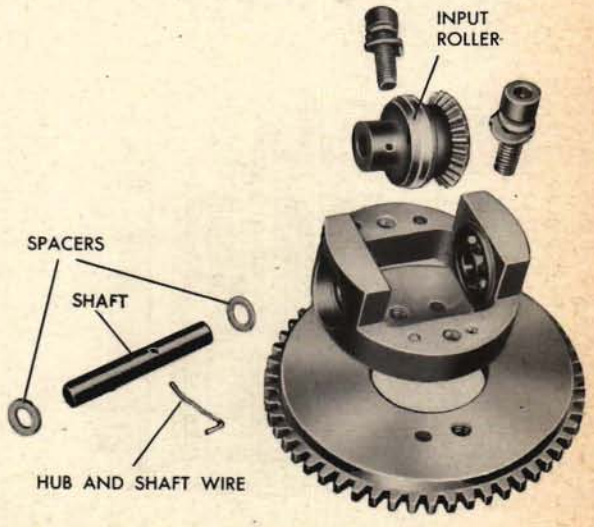

A SINGLE-UNIT ANGLE GEAR

Disassembling a single-unit

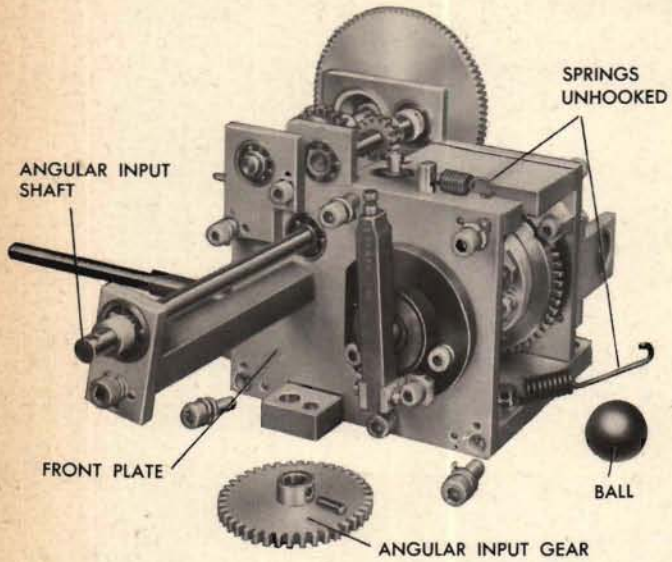

The single-unit component integrator described and illustrated in this chapter is from the Dummy Director Mk 1 Mod 3.

In disassembling a component integrator, be sure to tag all spacers.

1. Use several loops of strong twine to unhook both springs. Remove the ball. Remove the gear from the angular input shaft.

2. Unscrew the five No. 10 screws and one No. 8 screw and lift off the front plate. (Be careful not to bend the dowels.)

3. Unscrew the four No. 10 screws from the back plate.

4. In order to avoid bending the dowels, pull the top plate and the bottom, or mounting, plate away from the back plate simultaneously. (Carefully tap and pry the plates if necessary, and do not allow the spur gear on the angular input shaft to jam in the cutout portion of the top plate.)

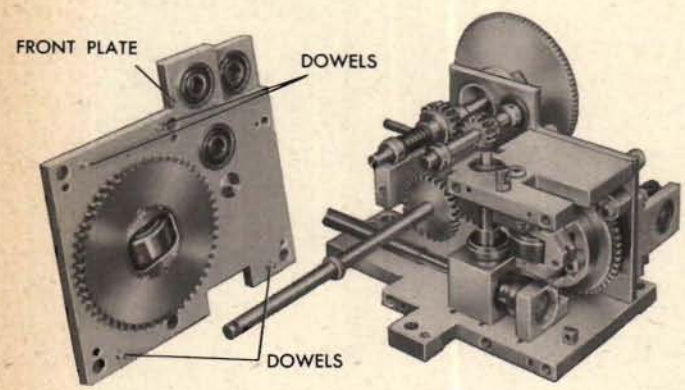

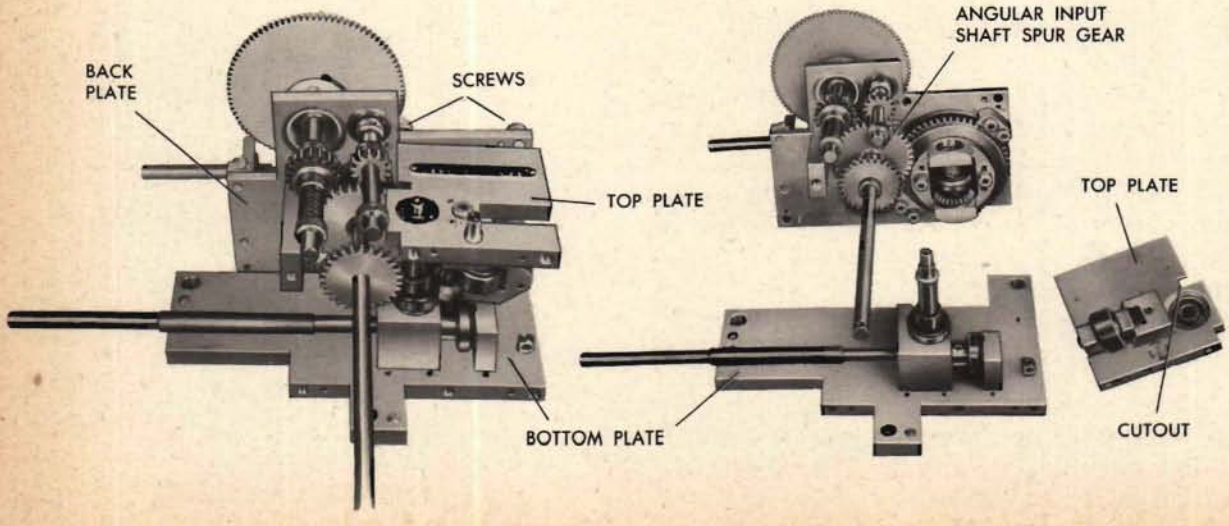

5 Remove the guide blocks and lift off the angle gear.

6 Lift off the ball retainer, being careful not to lose any of the balls.

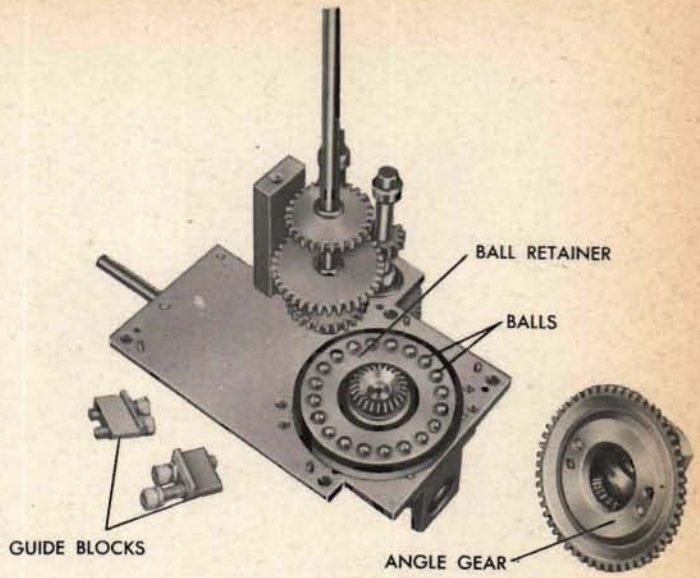

7 Loosen the two No. 8 screws which hold the hanger of the input roller shaft to the angle gear. Carefully lift off the doweled hanger.

8 Mark the gear end of the hanger and note the position of the spacers. Then pull out the wire and push out the shaft.

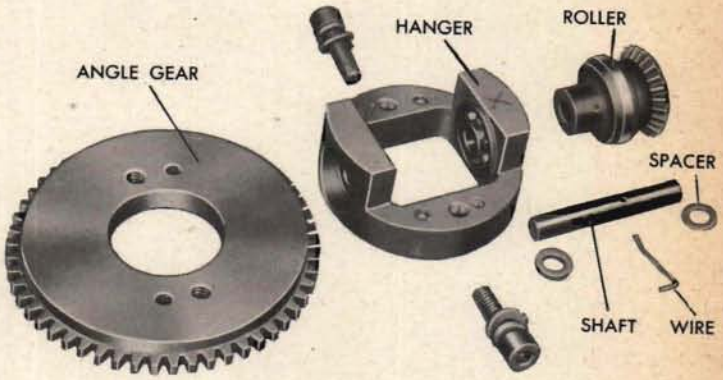

9 Loosen the four No. 8 screws and remove the hangers and worm shaft from the rear of the back plate.

10 Unpin and remove the bevel gear from the linear input shaft.

11 Remove the snap ring and pull out the linear input shaft.

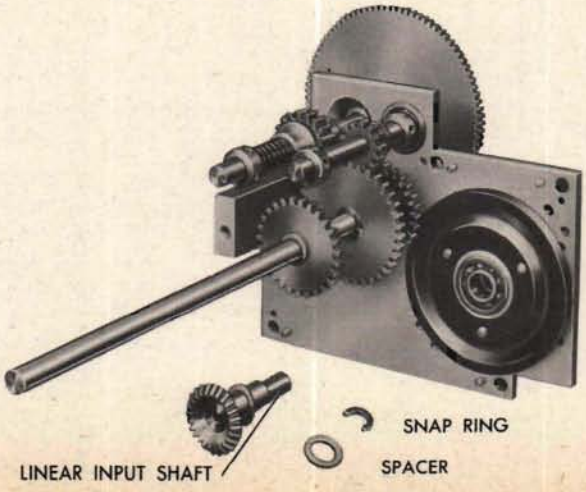

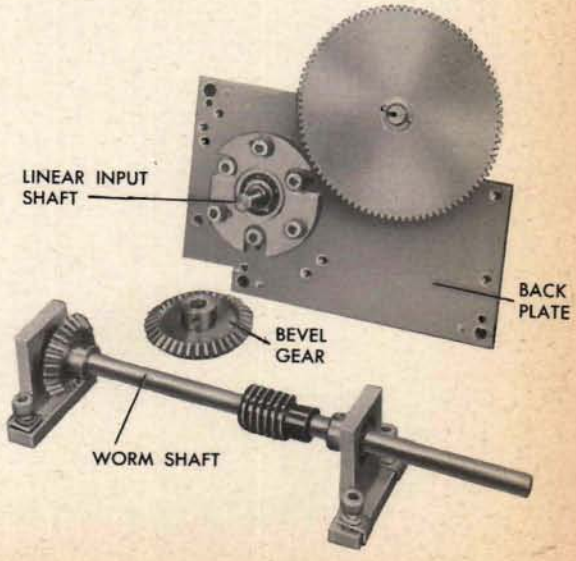

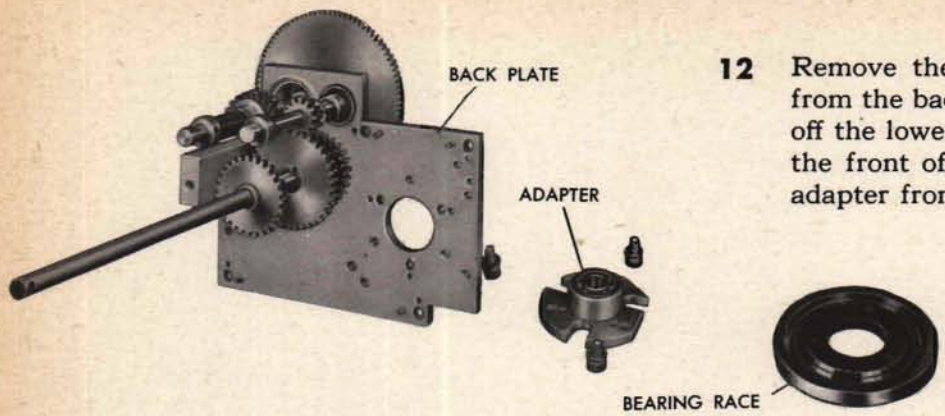

12 Remove the six No. 8 screws from the back of the plate. Lift off the lower bearing race from the front of the plate and the adapter from the back.

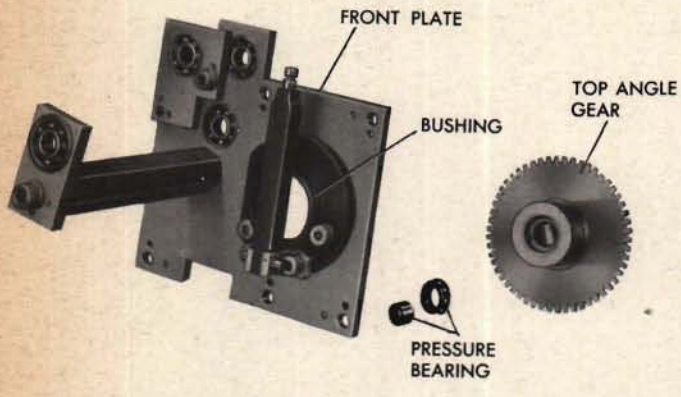

13 Pull the top angle gear and guide roller out of the bushing in the front plate. Remove the inner race and the ball retainer of the pressure bearing.

14 To remove the top guide roller from its mounting on the angle gear, drive out the shaft, and lift out the roller. Tag the spacers.

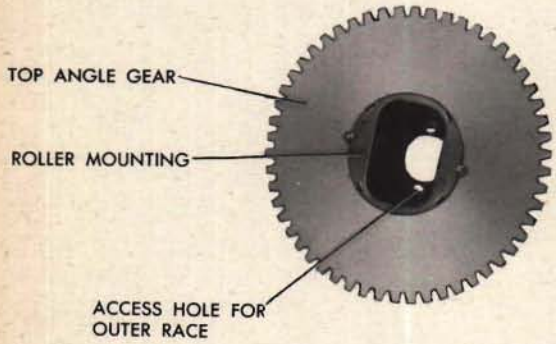

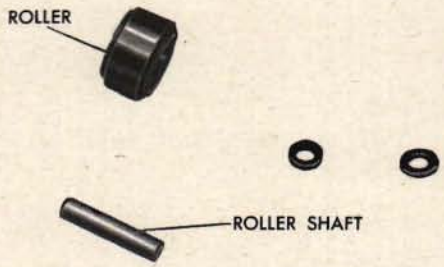

15 To remove the outer race of the pressure bearing, push a rod against the edge of the race through the access hole in the mounting.

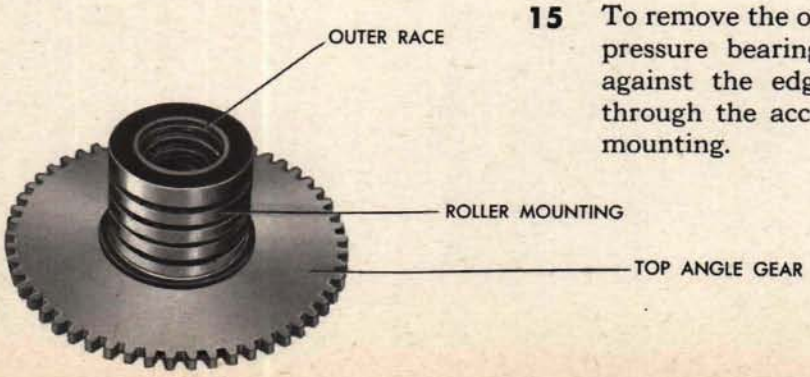

16 Loosen the three No. 8 screws and lift the bushing off the front plate. Remove the cotter pin and pull out the pivot in order to remove the pressure arm.

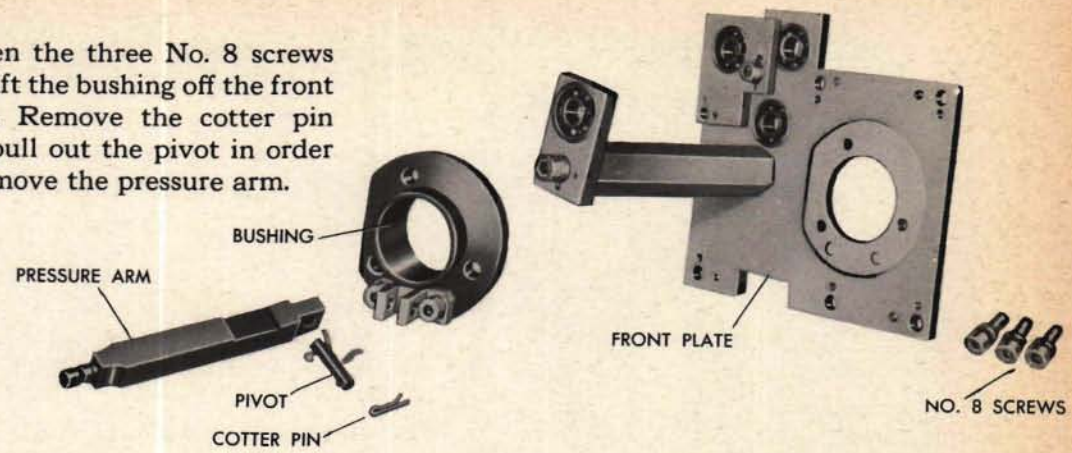

17 To remove the pivoted guide roller from the top plate, unscrew the No. 8 screw and pull the block off the dowels.

18 Separate the yoke from the block by driving out the pivot which is staked.

19 To remove the roller from the yoke, drive out the pin holding the shaft and push out the shaft.

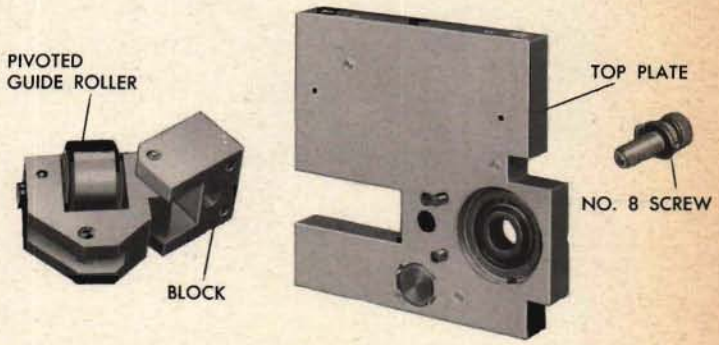

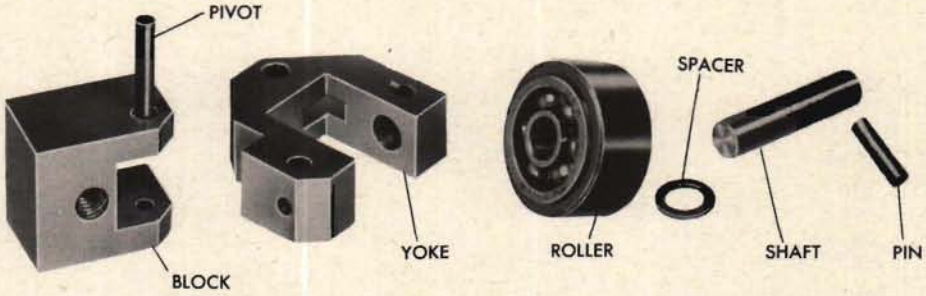

20 To remove the output shafts and hangers from the bottom plate, unscrew the six No. 8 screws.

21 Drive the pins out of the collar and roller hub on one output shaft. Separate the shafts from the hanger.

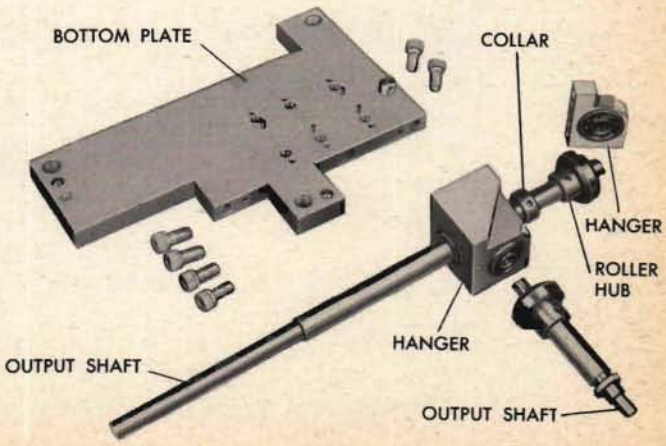

Repairing the parts

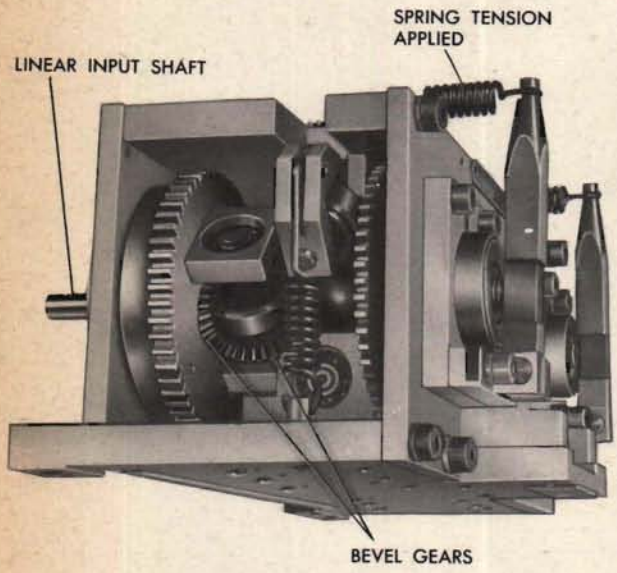

Replacing or repinning a bevel gear

If a new bevel gear is to be mounted on the input roller shaft, or a missing bevel-gear pin replaced, assemble the entire unit, holding the parts in place with set screws. Apply spring tension and examine the bevel gears for correct mesh. Then disassemble the unit and pin the gear.

Clean all gears before reassembling the unit.

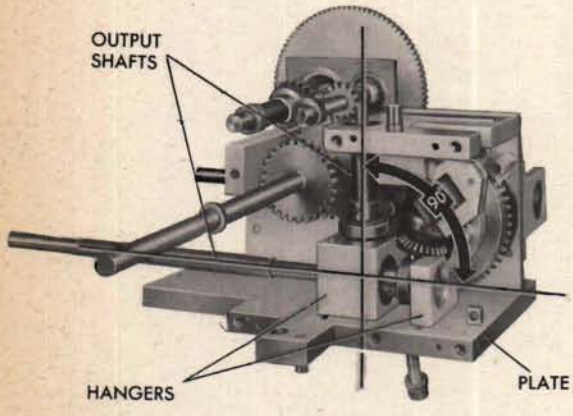

SINGLE-UNIT—FRONT REMOVED

Positioning new output shaft hangers

The output shafts must be positioned precisely at 90° to each other in order to give the correct output. Drive out the old dowels in the plate, mount the new hanger on the plate and then reassemble the entire unit. Shift the hangers in the screw clearance holes until the shafts are square and parallel to the edges of the plates. If the shafts are square with respect to the plates, they can be assumed to be square to each other. Tighten the hanger screws; disassemble the unit, and dowel the hangers with oversize dowels. Turn to pages 74-75 for instructions on doweling.

Replacing or repinning angular input gearing

The axis of the guide roller in the top angle gear must be parallel to the axis of the linear input roller for smooth operation.

If a new angle gear is to be installed in the single-unit integrator, one of the gears meshing with the angle gears may have to be repositioned to make the roller axes parallel. To reposition a gear on the angular input shaft, assemble the entire unit and make the setting between the two roller axes, holding the gear in position with a set screw. Disassemble the unit and pin the gear.

To replace the upper roller mounting in the double-unit, assemble the roller in the mounting and the mounting on the angle gear. Fasten the mounting with the two screws. Then reassemble the unit according to the procedure on pages 337-341. Make the roller axis exactly parallel to the input roller axis by turning the mounting within the limits provided by the slotted holes. Access to the screws is through the holes in the bushing and front plate. Disassemble the unit and dowel the mounting and gear together.

In a double-unit, if the adjustable gears on the angular input shaft, S2, must be replaced, the angular relationship between the two units must be reset, as well as the parallelism of the guide rollers to the input rollers. Mount the gears on the shaft and then reassemble the unit according to the procedure on pages 337-341. Refine the angular relationship between the angular input gears to meet the requirements of bench check 3. Tighten the set screw in the gear hub. Tighten the screws holding the gears together. Disassemble the unit and pin the replacement parts.

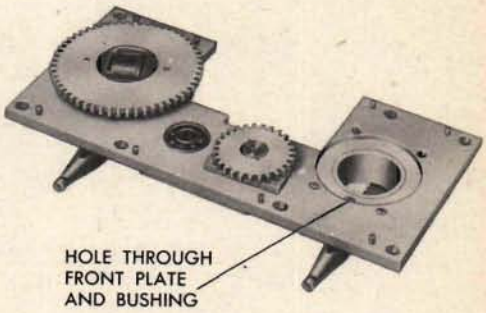

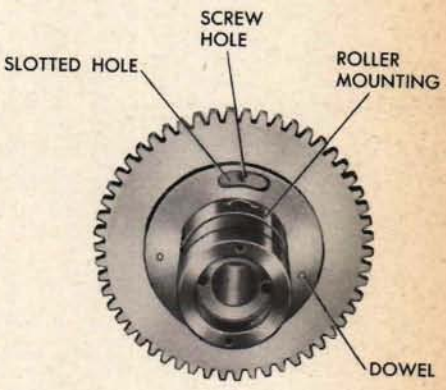

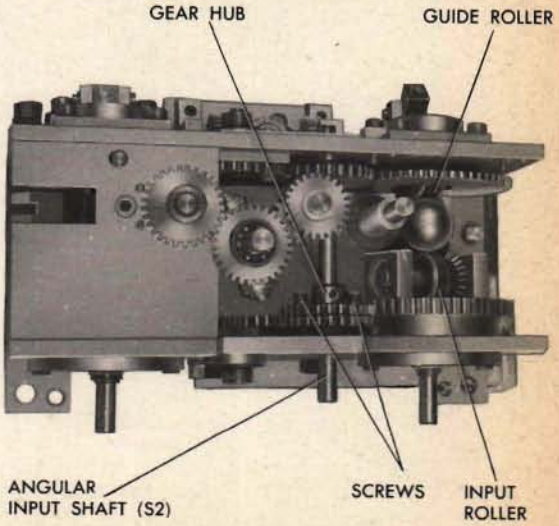

Replacing a ball or a roller

All damaged balls and rollers should be replaced. Bearings should be assembled in the rollers with a light press fit. Balls, rollers and bearings should be cleaned and lubricated before final reassembly.

Reassembling the single-unit

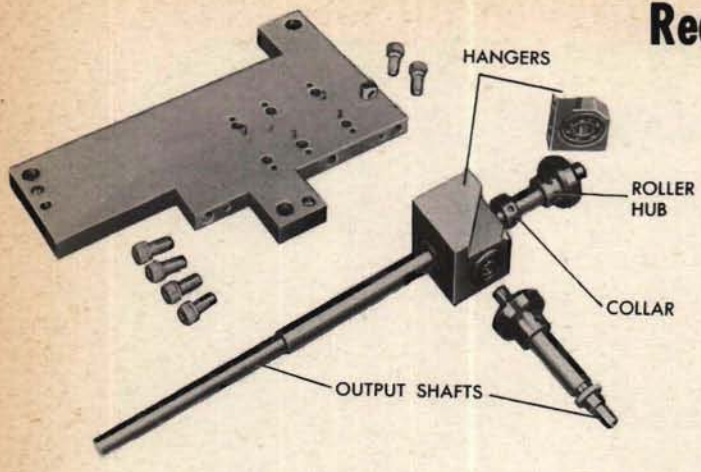

1 Mount the output shafts in the hangers. Repin the collar and roller hub.

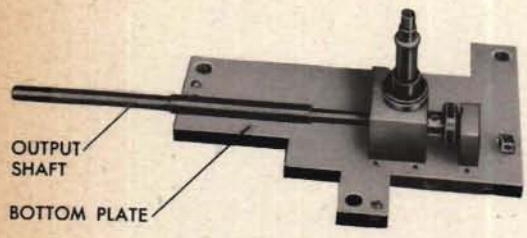

2 Assemble the output shaft hangers on the bottom plate.

3 To mount the roller in the yoke, hold the roller and the spacers in position and push the shaft in. Pin the shaft, and stake the pin.

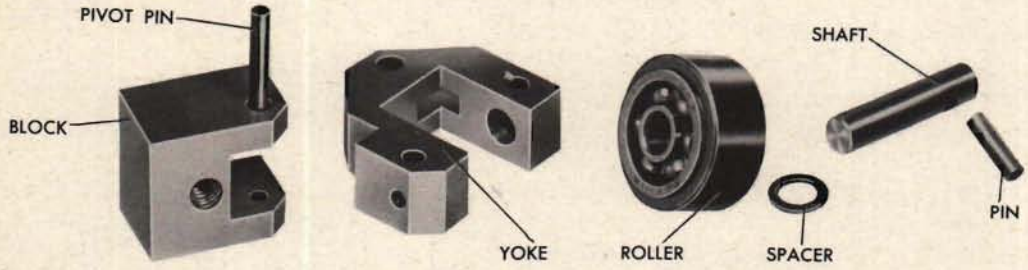

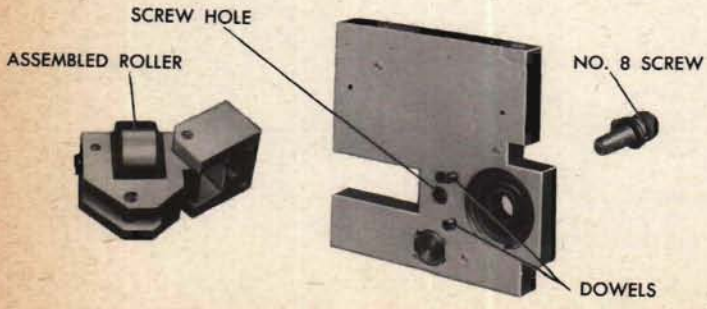

4 Mount the yoke in the block, push in the pivot pin and stake it at both ends.

5 Mount the block on the dowels in the top plate and fasten it in place with a No. 8 screw.

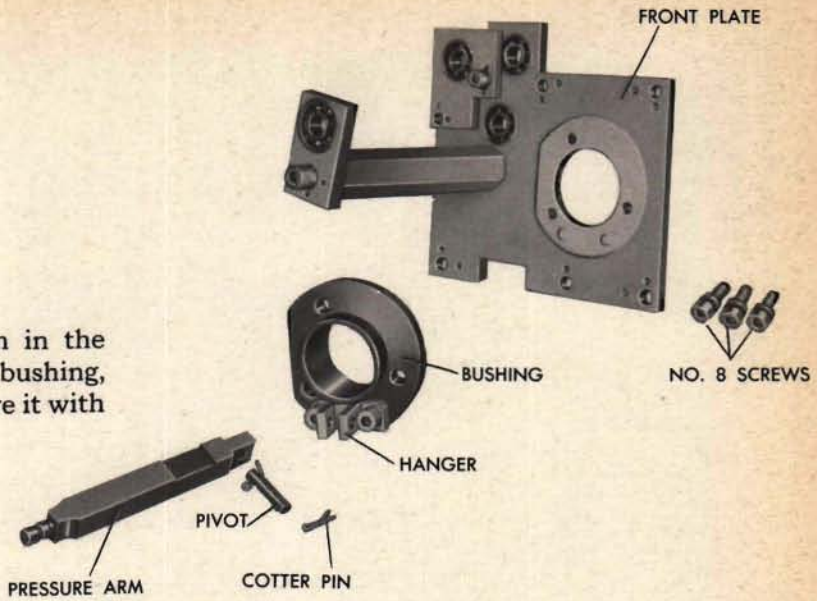

6 Mount the pressure arm in the hanger attached to the bushing, insert the pivot, and secure it with cotter pins.

7 Slide the bushing into the hole in the plate, with the lever arm in the position shown, and tighten the three No. 8 screws.

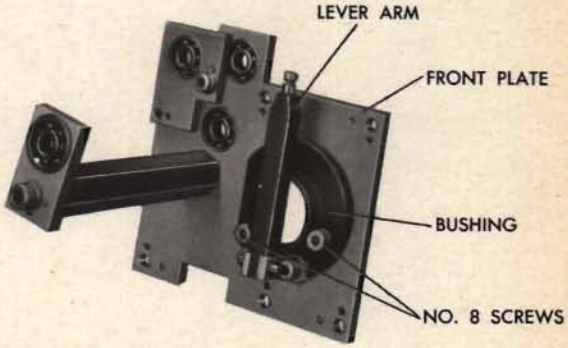

8 Push the outer race of the pressure bearing into the roller mounting riveted to the top angle gear.

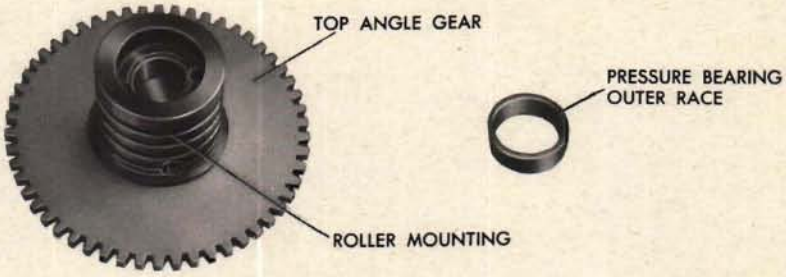

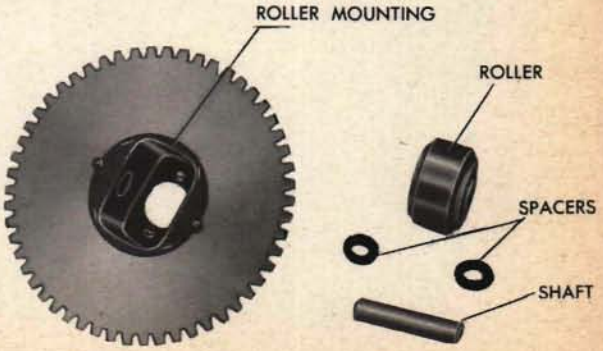

9 Place the roller and spacers in the mounting. Insert the shaft and stake it at both ends.

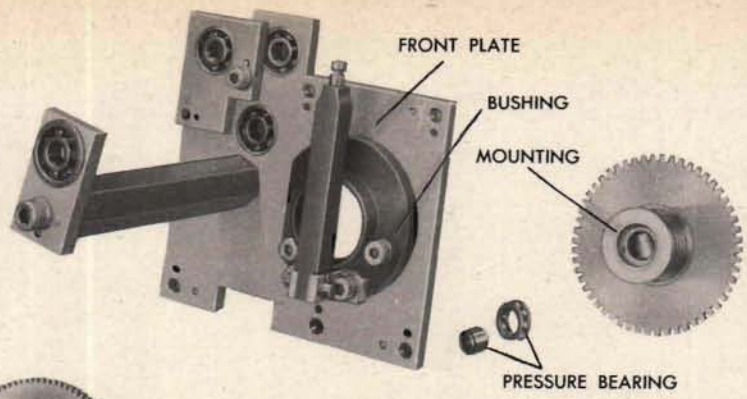

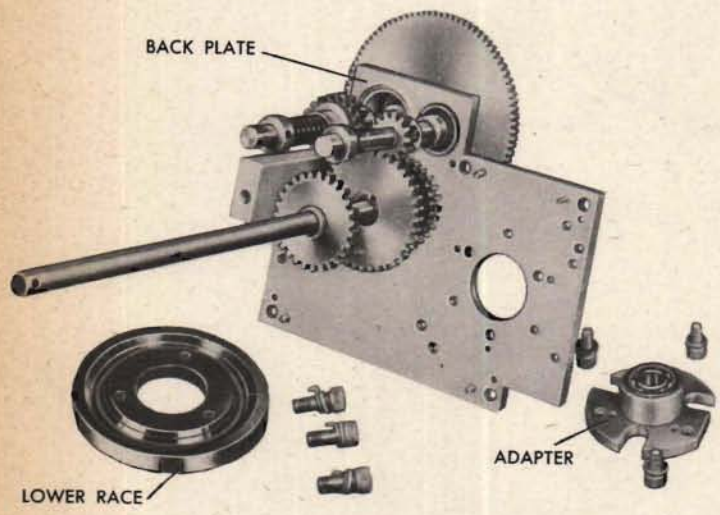

10 Slide the mounting into the bushing in the front plate and replace the pressure bearing.

11 Place the adapter in the plate and the lower race on the plate at the same time. Then, holding the parts in position, tighten the six No. 8 screws.

12 Mount the linear input shaft in its adapter, and secure it in place with the spacer and snap ring.

13 Mount the bevel gear on the linear input shaft, seating the taper pin with hand pressure only. Mount the worm shaft; test the meshes and seat the taper pin if the mesh is satisfactory.

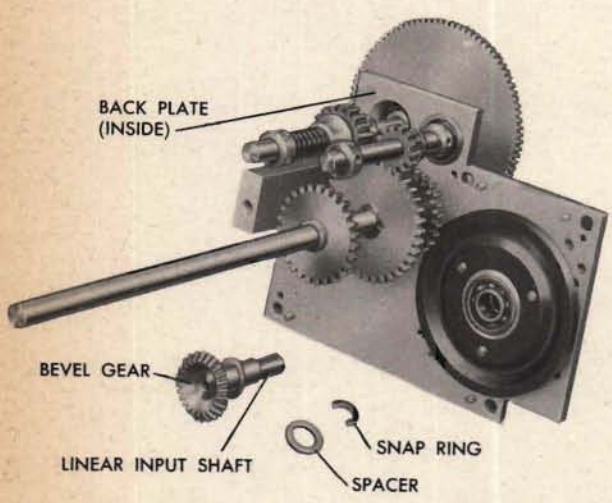

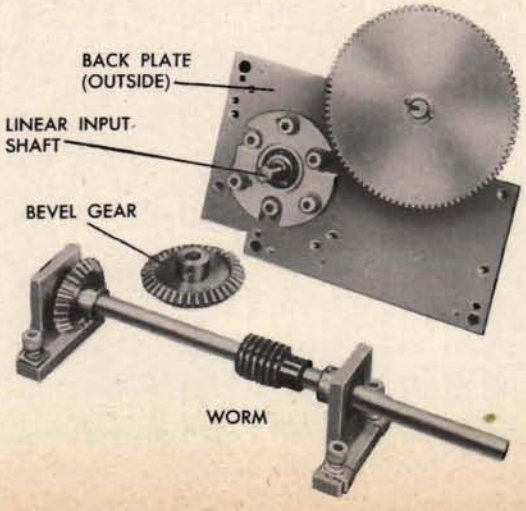

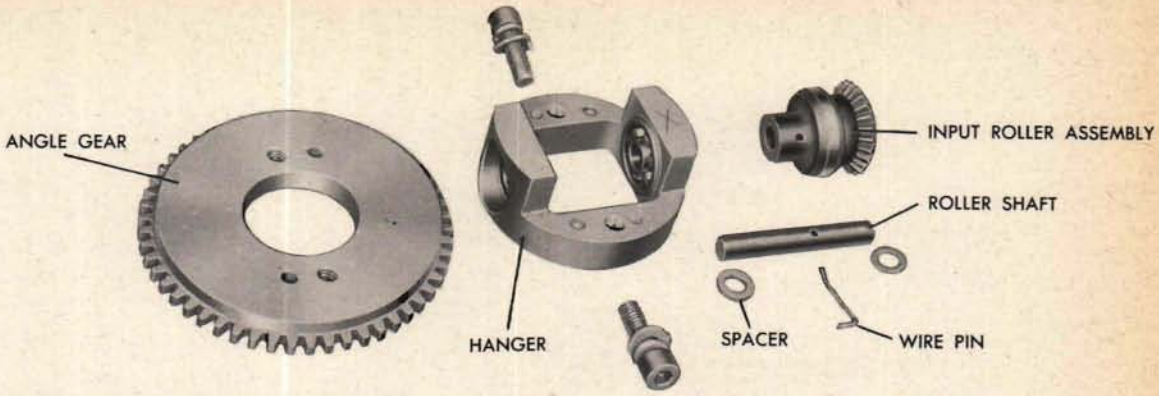

14 Mount the input roller assembly and spacers in the hanger with the gear toward the marked end.

15 Push the shaft in place and secure it with the wire pin.

16 Mount the hanger carefully on the angle gear and fasten it with the screws.

17 Mount the ball retainer on the lower race and drop the balls in place. Lubricate the balls and races with an approved lubricant.

18 Place the angle gear assembly over the balls and fasten the guide blocks. Be sure to mesh the marked tooth of the angle gear with the marked tooth of the gear on the angular input shaft.

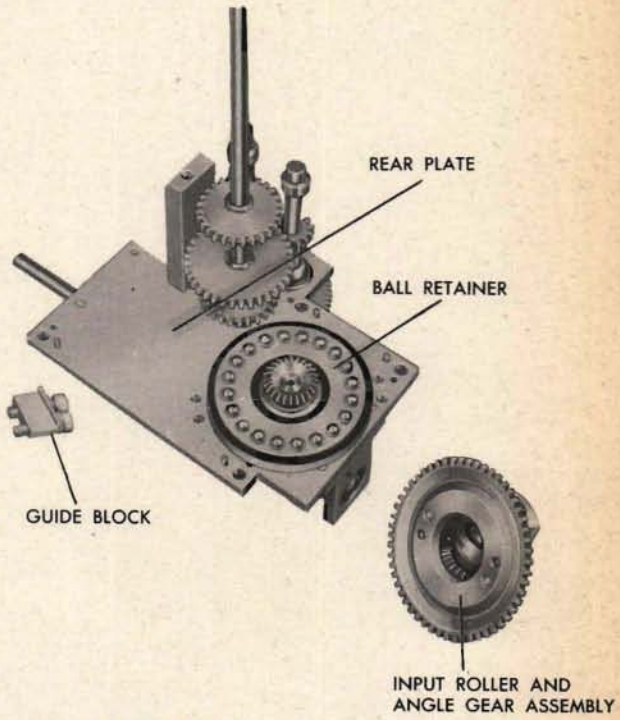

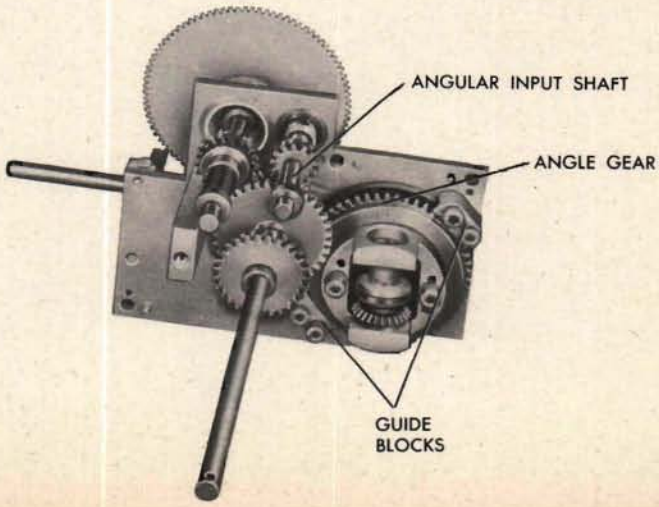

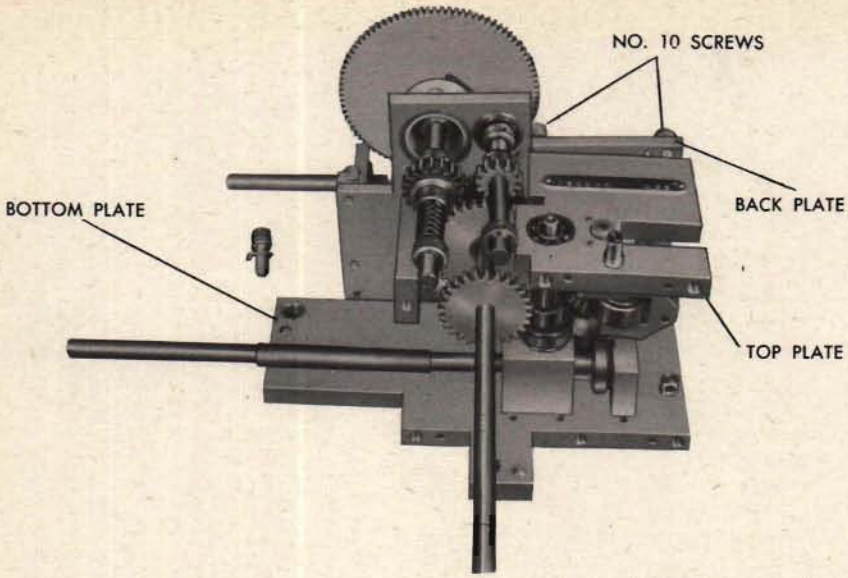

19 Simultaneously position the top and bottom plates on the back plate and fasten them with the four No. 10 screws.

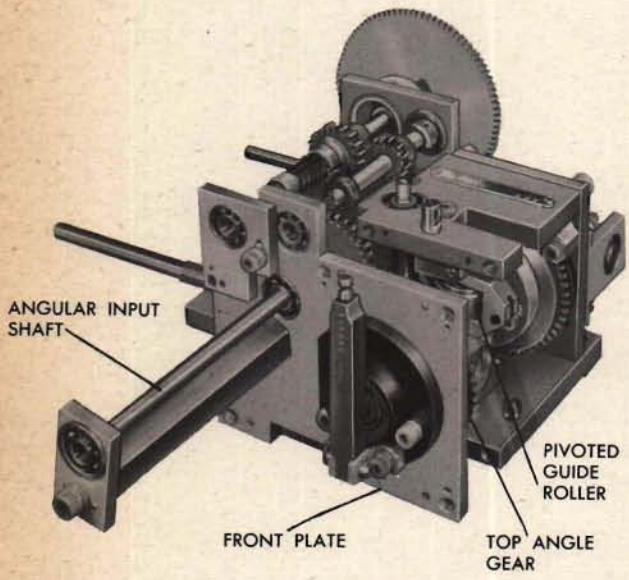

20 Slide the front plate on the shafts. Carefully fit the dowels into the holes, and mesh the marked teeth of the top angle gear and the gear on the angular input shaft.

21 Lubricate the ball with approved lubricant. Hold up the pivoted guide roller, and insert the ball.

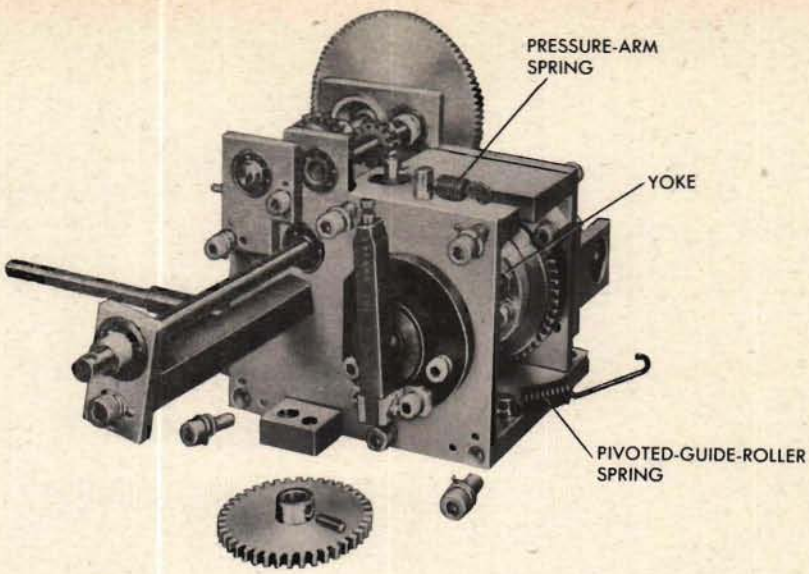

22 Using several loops of strong twine around the end, stretch the pivoted-guide-roller spring and hook it on the yoke. Hook the pressure-arm spring on the end of the arm.

23 Mount the spur gear on the angular input shaft and pin it.

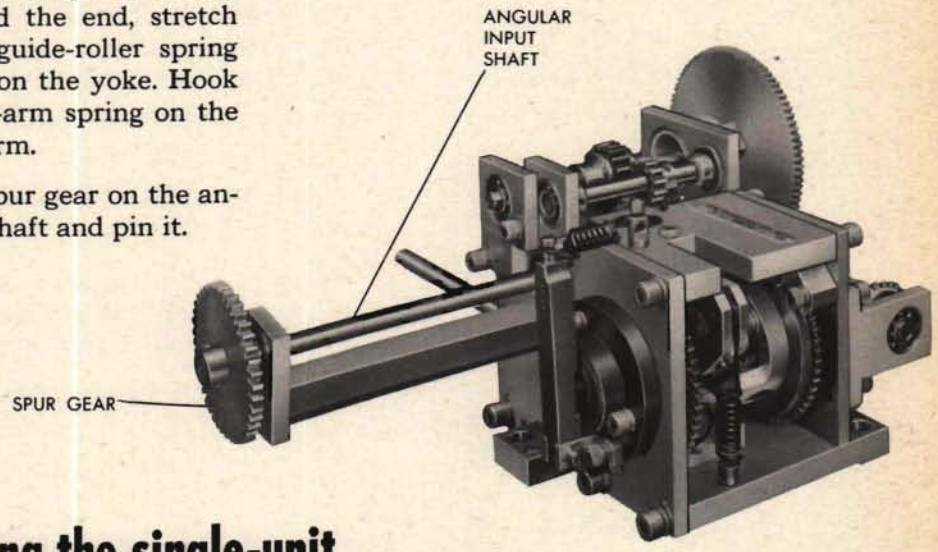

Bench checking the single-unit

1 Check the unit assembly against the assembly drawings.

2 The upper guide roller axis should be parallel to the input roller axis.

3 The gear meshes should be free, with minimum lost motion, and the shafts should have minimum end shake.

4 Turning the linear input should turn all rollers when the input roller axis is parallel to the pivoted-guide-roller axis.

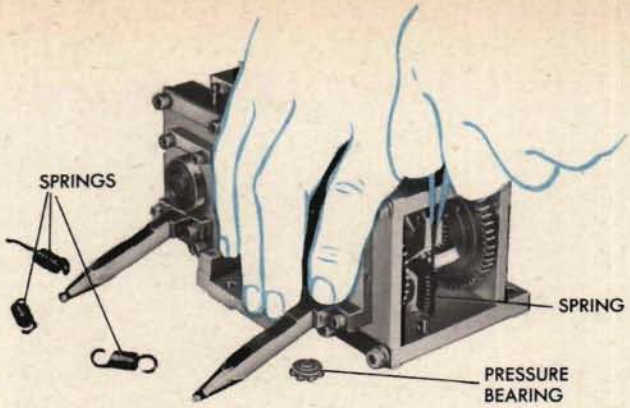

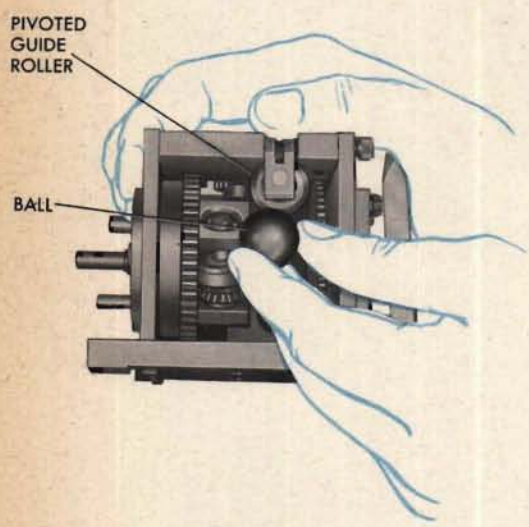

Disassembling the double-unit

The double-unit component integrator described and illustrated in this chapter is from the Computer Mark 1. Be sure to tag all spacers as they are disassembled.

1. Use several loops of strong twine to unhook all four springs. Lift out the pressure bearings.
2. Hold up the pivoted guide roller of each unit and remove each ball.
3. Remove differential D-2 after removing the four screws on the under side of the lower plate.
4. Remove the eight No. 10 screws and pull off the front plate. Tag the spacers.

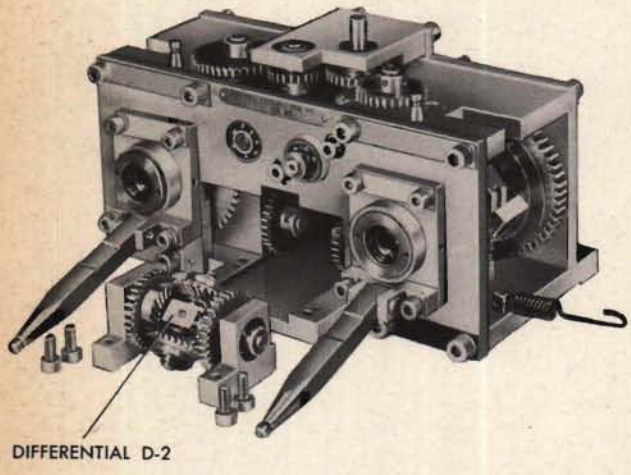

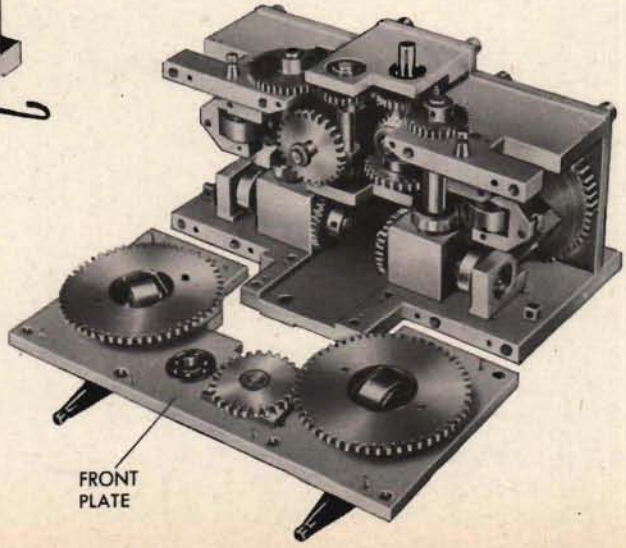

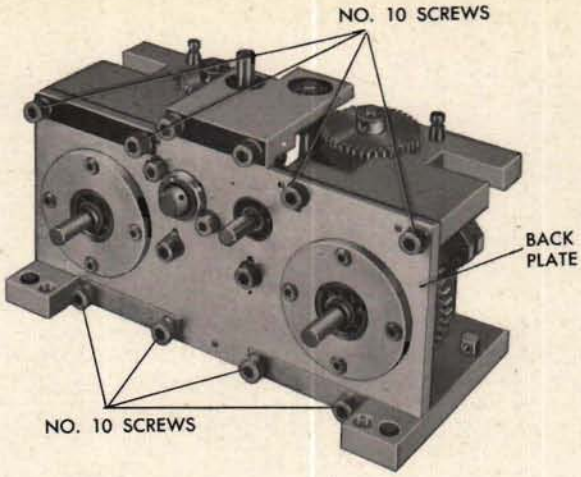

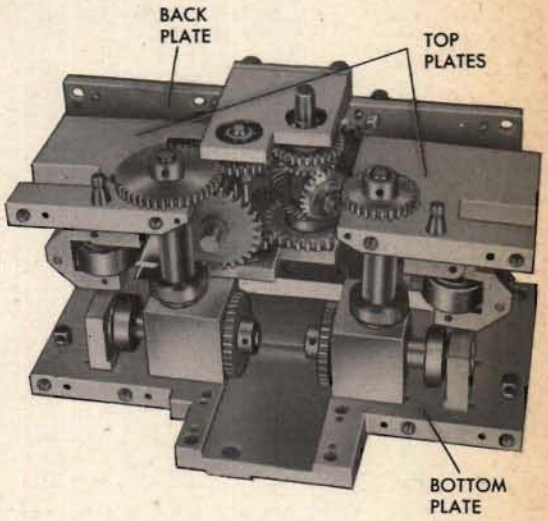

5 Remove the eight No. 10 screws in the back plate.

6 Separate the top plates and the bottom plate simultaneously from the back plate to avoid bending the dowels.

7 Pull the angle gears off their adapters on the back plate. Tag the big spacers under the angle gears.

8 Remove four No. 8 screws and lift off the hanger assembly in which differential D-1 and shaft assembly S6 are mounted.

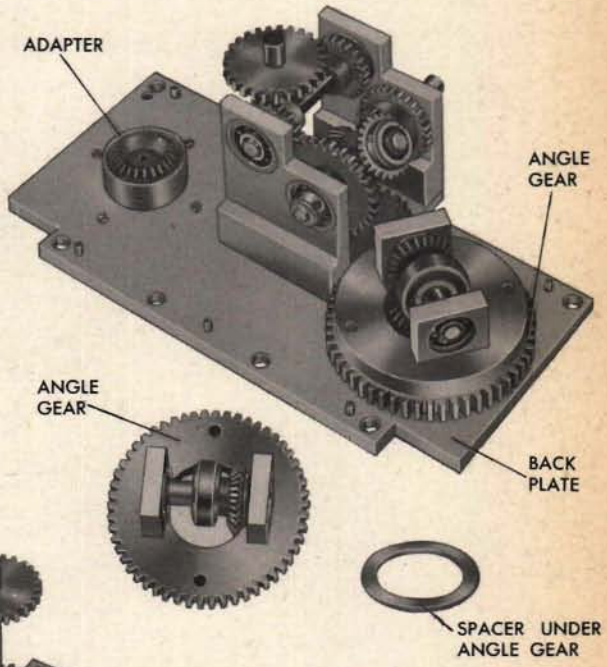

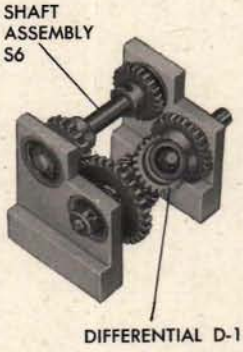

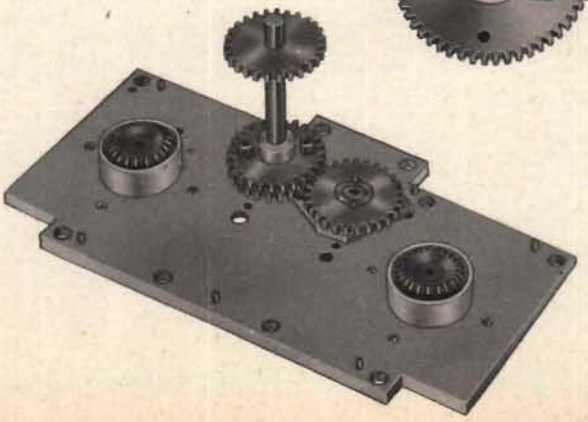

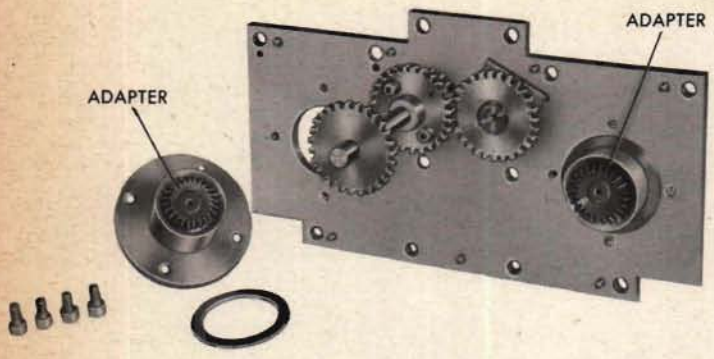

9 Remove the eight No. 6 screws and lift out the two adapters which support the linear input shafts.

10 Remove the linear input shafts from their adapters after pushing off their snap rings.

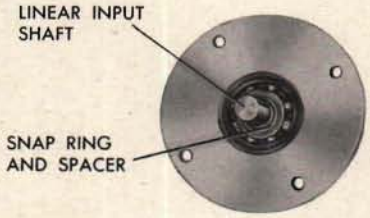

11 Remove the bearing from each angle gear by carefully tapping the outer race with a punch through the access holes in the gear.

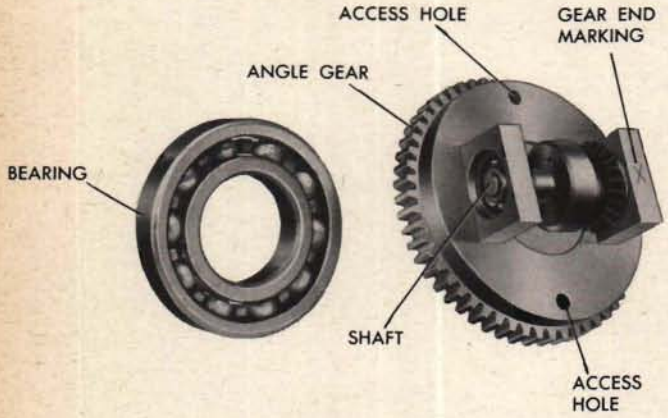

12 Before removing the input roller, mark the hanger near the gear end of the shaft. Then drive out the taper pin, and push out the shaft.

13 To remove the pivoted guide roller from the top plate, remove the No. 8 screw and pull the block off the dowels.

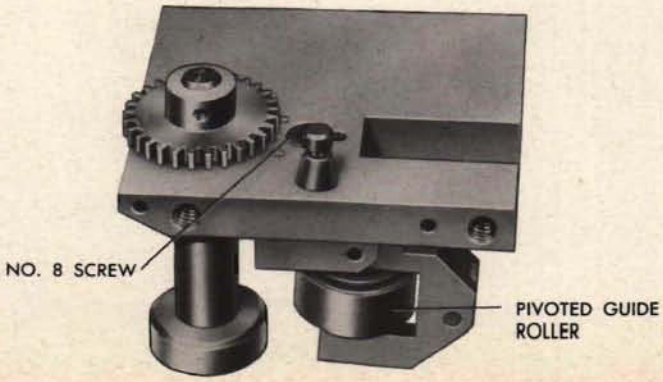

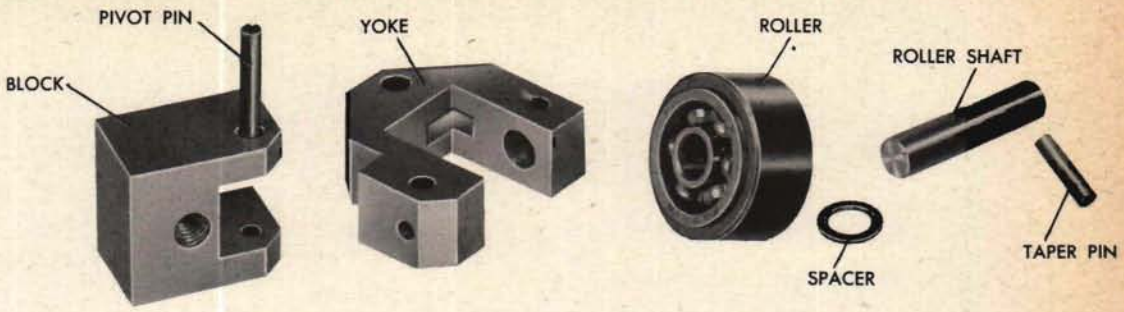

14 Separate the yoke and block by driving out the pivot pin.

15 Remove the roller from the yoke by driving out the taper pin and pushing out the shaft.

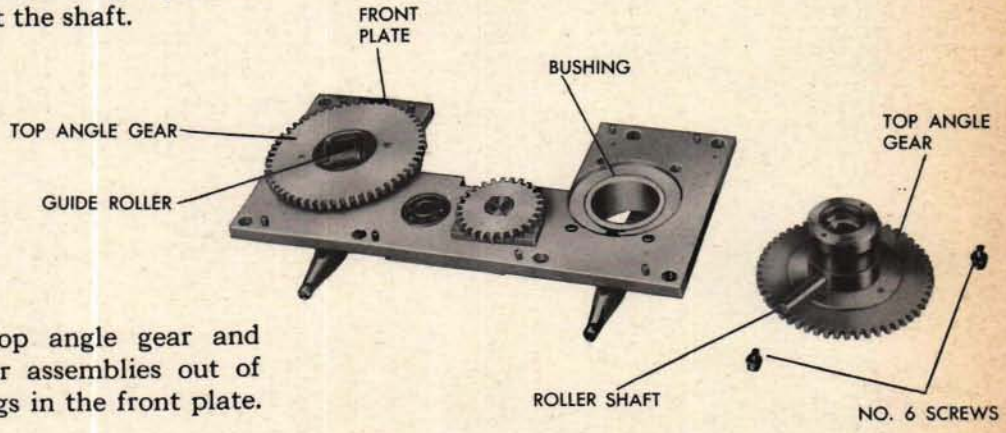

16 Pull the top angle gear and guide roller assemblies out of the bushings in the front plate.

17 To remove the guide roller from its mounting, take out the two No. 6 screws and drive out the shaft.

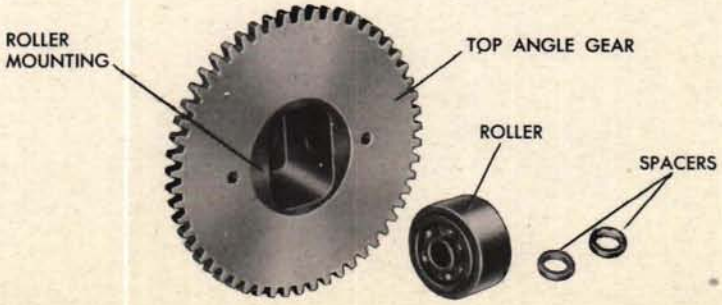

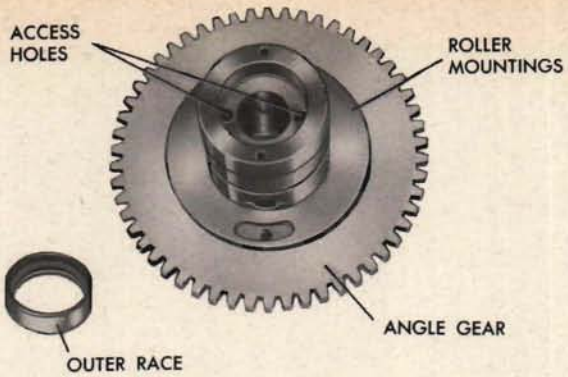

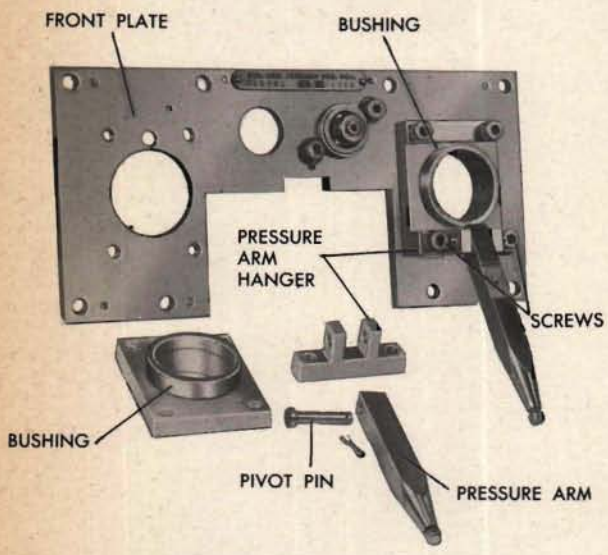

18 Remove the outer race of the pressure bearing by carefully pushing through the access holes in the roller mounting.

19 Take out the four No. 8 screws holding the pressure-arm hangers to the front plate, remove the cotter pins, and push out the pivot pins to separate the pressure arms from the hangers.

20 Take out the four remaining screws and remove the bushings.

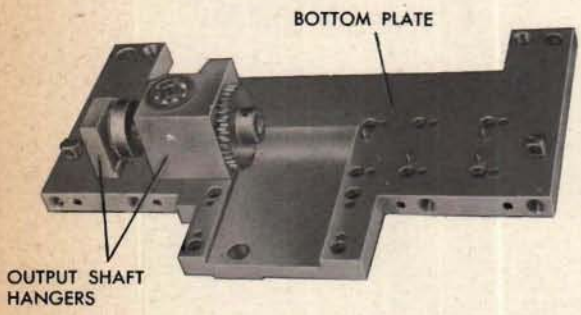

21 To remove the output shaft assemblies, take the screws out of the bottom of the lower plate and carefully lift the hangers off their dowels.

22 Drive the taper pins out of the spur gears and separate the roller assemblies.

TO REPAIR THE DOUBLE-UNIT, CONSULT INSTRUCTIONS ON PAGES 324-325.

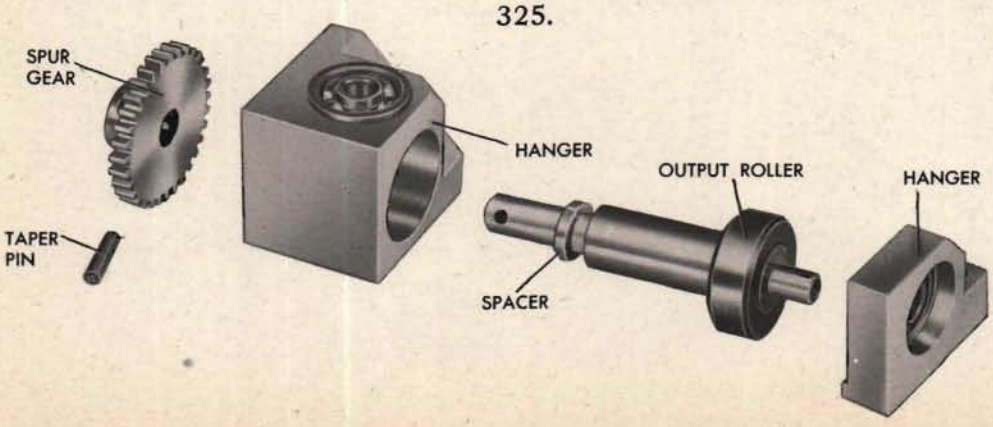

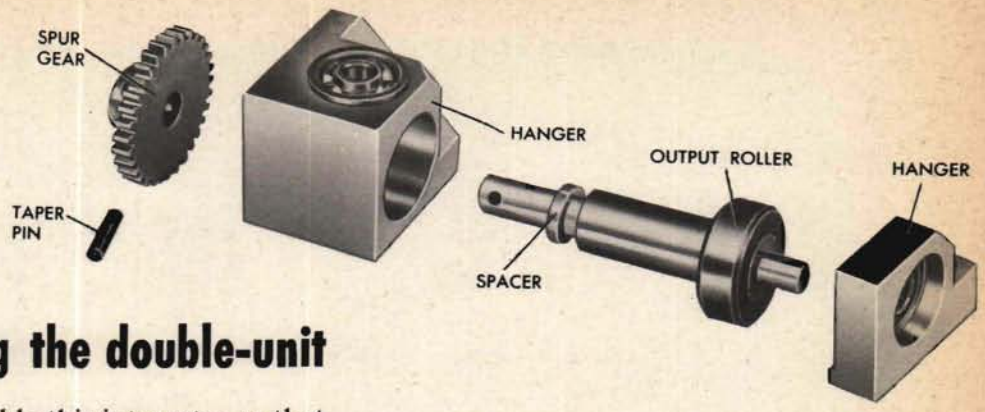

Reassembling the double-unit

In order to reassemble this integrator so that the parts will fit together nicely and the settings between the units will be accurate, remount the parts in their original positions. The important parts are marked or numbered for ease in identification. The spacers should have been tagged at disassembly.

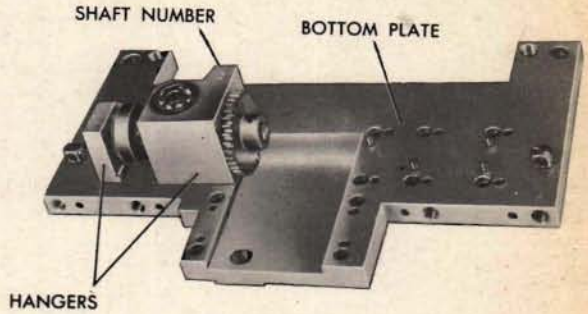

1 Mount each output roller shaft in its hangers and pin the spur gears to the shafts.

2 Mount the hangers on the bottom plate according to the shaft numbers.

3 Hold each pressure arm in position in its hanger and slip the pivot pins in place. Replace the cotter pins.

4 Mount the bushings and pressure-arm hangers on the front plate as shown.

5 Replace the outer race of the pressure bearing in the roller mounting.

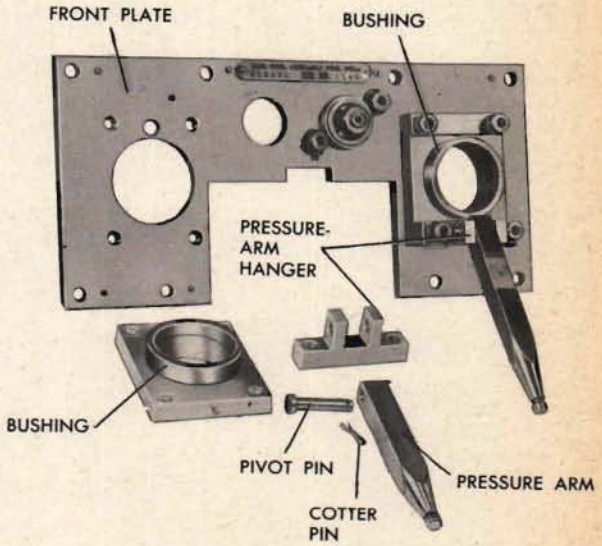

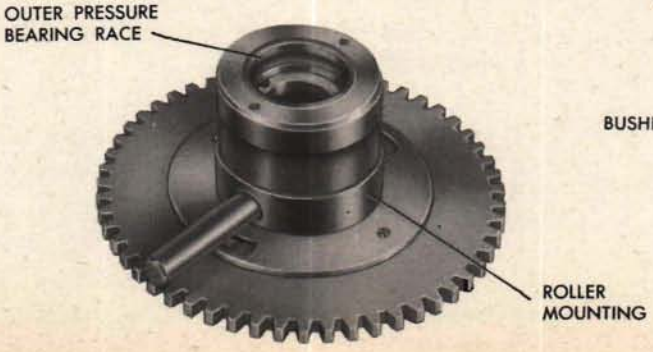

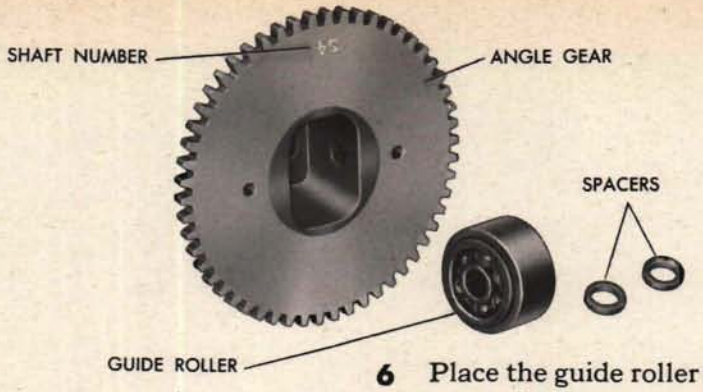

6 Place the guide roller and spacers in the mounting, push the shaft into position, and stake both ends of the shaft. Replace the two screws.

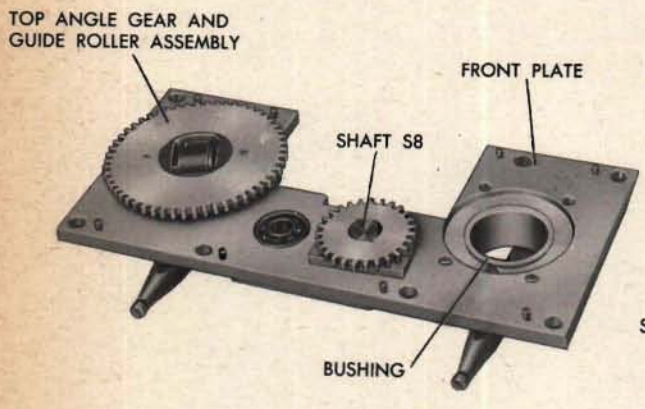

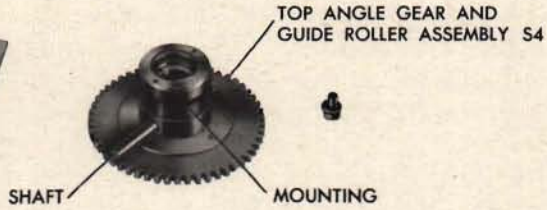

7 Slide the top angle gear and guide roller assemblies into the bushings in the front plate. Mesh the marked teeth of angle gear S4 with corresponding mark on the gear pinned to shaft S8. (There are two marks on this gear, one for the angle gear, and one for the gear on the angular input shaft.)

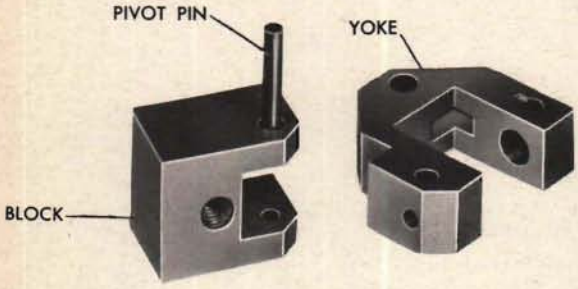

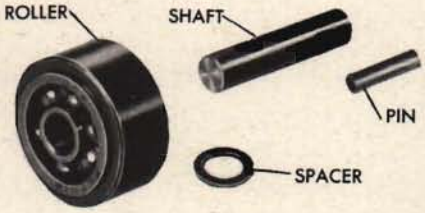

8 Mount the roller and spacer in the yoke and push the shaft into position. Pin and stake it.

9 Mount each yoke in its block. Push the pivot pins into place, and stake them at both ends.

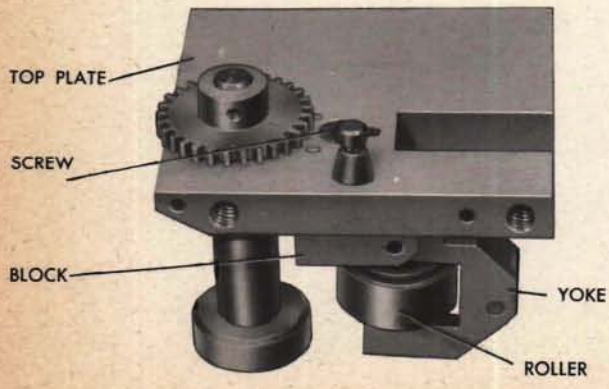

10 Push the blocks onto the dowels in the top plates and fasten with screws from the top of the plates.

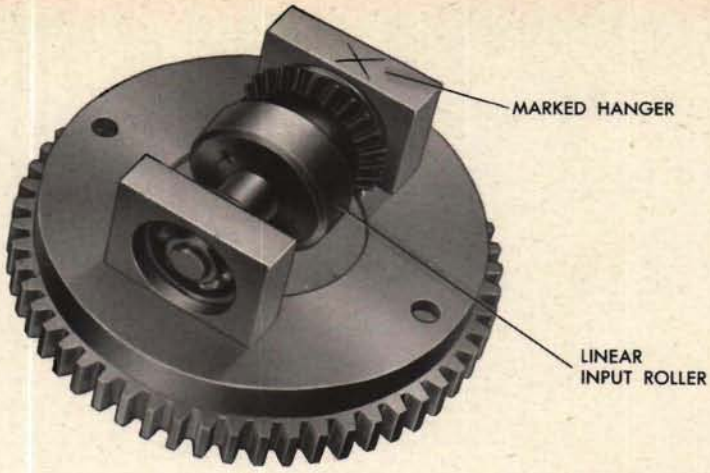

11 Mount the linear input rollers in the angle gears so that the roller gears are toward the marked hangers. Repin the gear to the shaft.

12 Insert the large bearings in the angle gears.

13 Slide the linear input shafts into the adapters. Replace the spacers and snap rings on the shaft extensions.

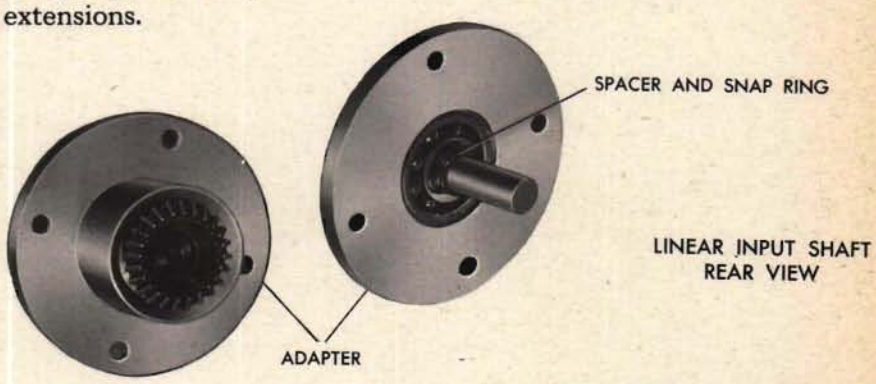

14 Mount the adapters in the back plate.

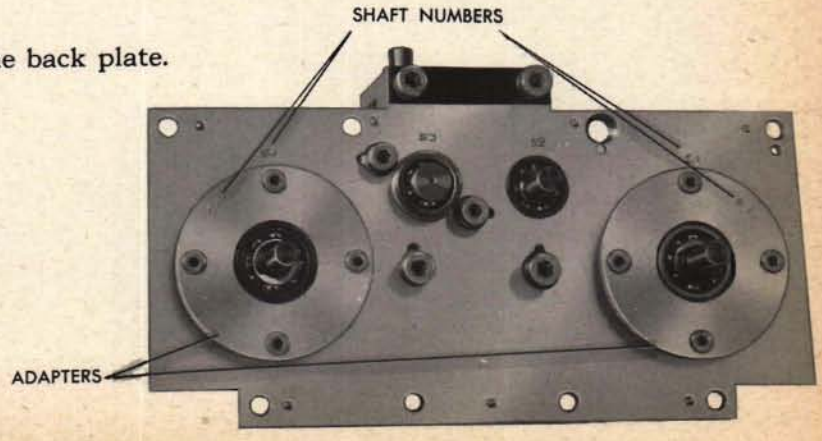

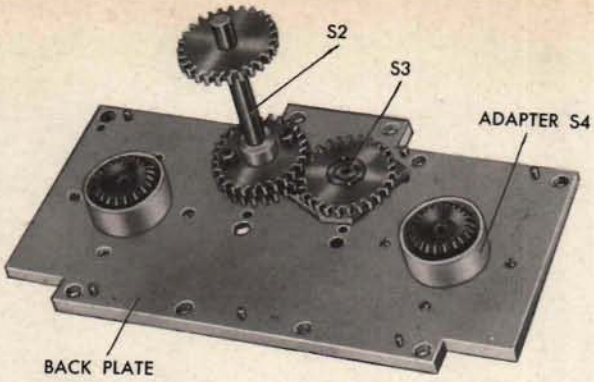

15 Mount the hanger assembly containing differential D-1 and shaft assembly S6 on the back plate.

16 Replace each large spacer on its adapter. Mount the angle gear with input roller shaft S11 on adapter S4. Mount the other angle gear so that the input roller axes are at right angles to each other, with the bevel-gear ends in the relative positions shown.

Mounting the angle gears with their marked teeth meshing with the marked teeth of the gears on shafts S2 and S3 will accomplish this, provided the relative position of the gears which are doweled together has not been altered.

17 Simultaneously push the top and bottom plates onto the dowels in the back plate.

18 Mount the front plate, making the gears mesh so that the axes of the guide rollers in the top angle gears are parallel to the axes of the corresponding input rollers.

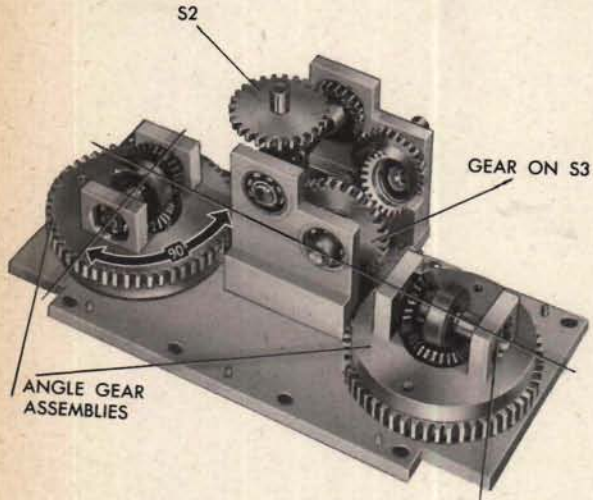

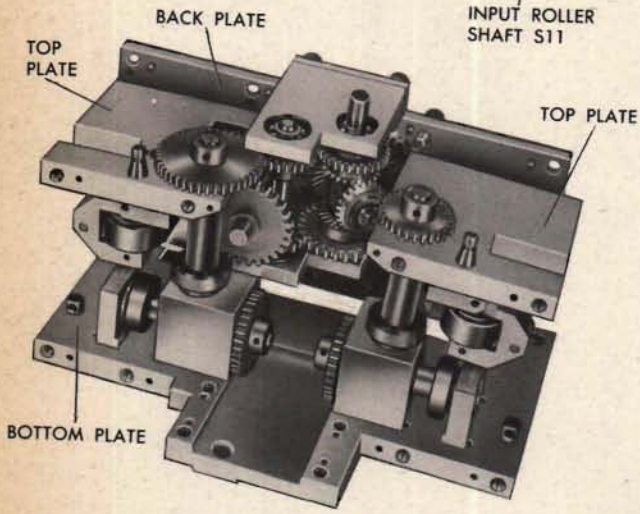

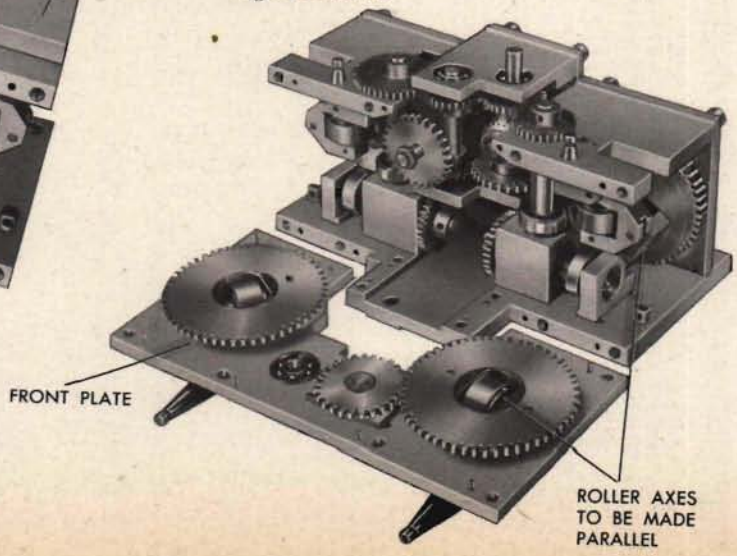

19 Mount differential D-2 on the bottom plate and fasten the four screws under the plate.

20 Hold up the pivoted guide rollers, and replace the balls.

21 Hook the two pivoted-guide-roller springs, insert the pressure bearings and then hook the lever-arm springs.

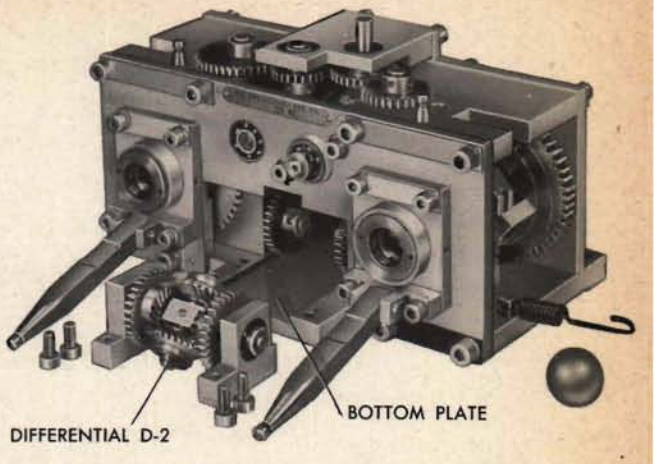

Bench checking the double-unit

1 Check the unit against the assembly drawings.

2 Shafts and gears must turn freely, with a minimum of end play and lost motion. (Component integrator shafts normally turn somewhat stiffly because the balls and rollers are under spring pressure.)

3 Turn the angle gear of one integrator to a position where turning its linear input shaft causes only one of its output shafts to turn. Now if the axes of the input roller shafts of both integrators are at right angles to each other, only one output of the second integrator will turn when the linear input shaft of the second integrator is turned.

4 Turn the angle gear until the axis of one input roller is parallel to the pivoted-guide-roller axis. Now, turning both linear input shafts should turn all outputs.

5 Check that the angle gear assemblies are in the correct relationship to each other. (See step 16 in the reassembly.)

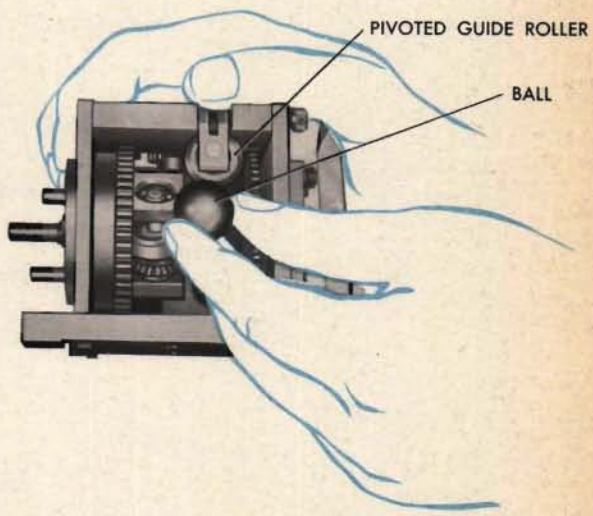

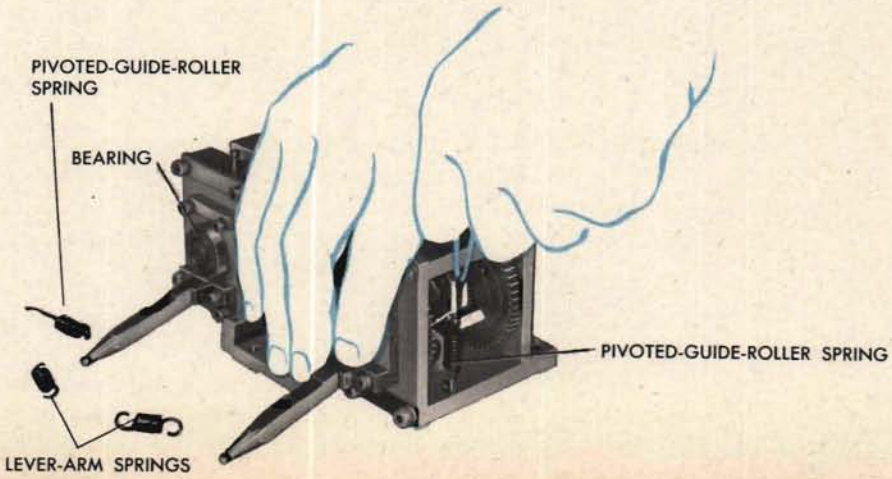

THE BALLISTIC COMPUTER

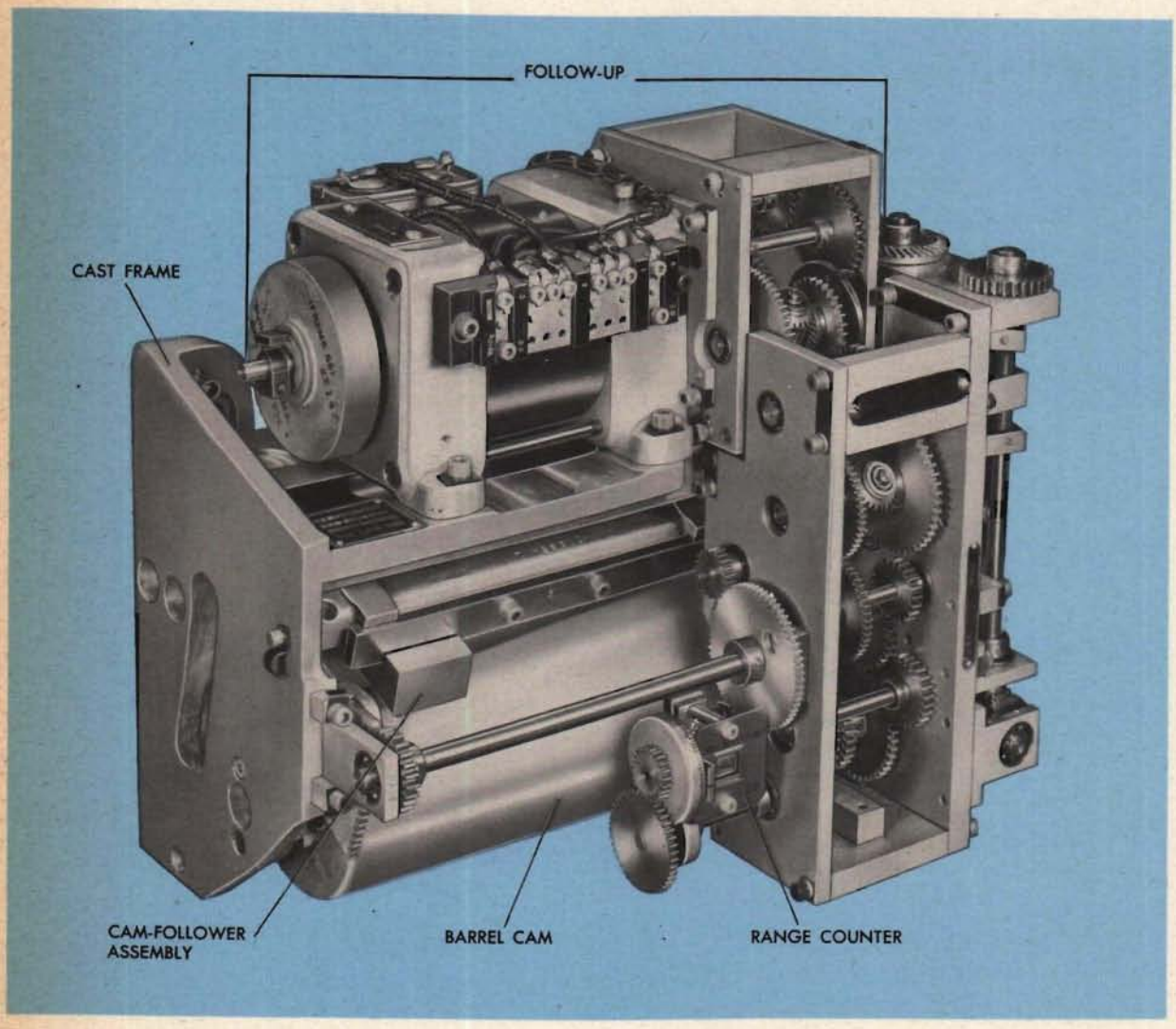

A ballistic computer is a small computing instrument in itself. Either on the bench or in the main instrument, its outputs very closely approximate the values provided in ballistic data tables for any given advance range, *R2,* and predicted target elevation, *E2.*

The functional portions of a ballistic computer are: a barrel cam and follower assembly, a follow-up, input and output shaft lines, and a cast frame on which all the parts are mounted. Three counters which register the input and output quantities are mounted on the ballistic computer making it a completely self-contained computing unit.

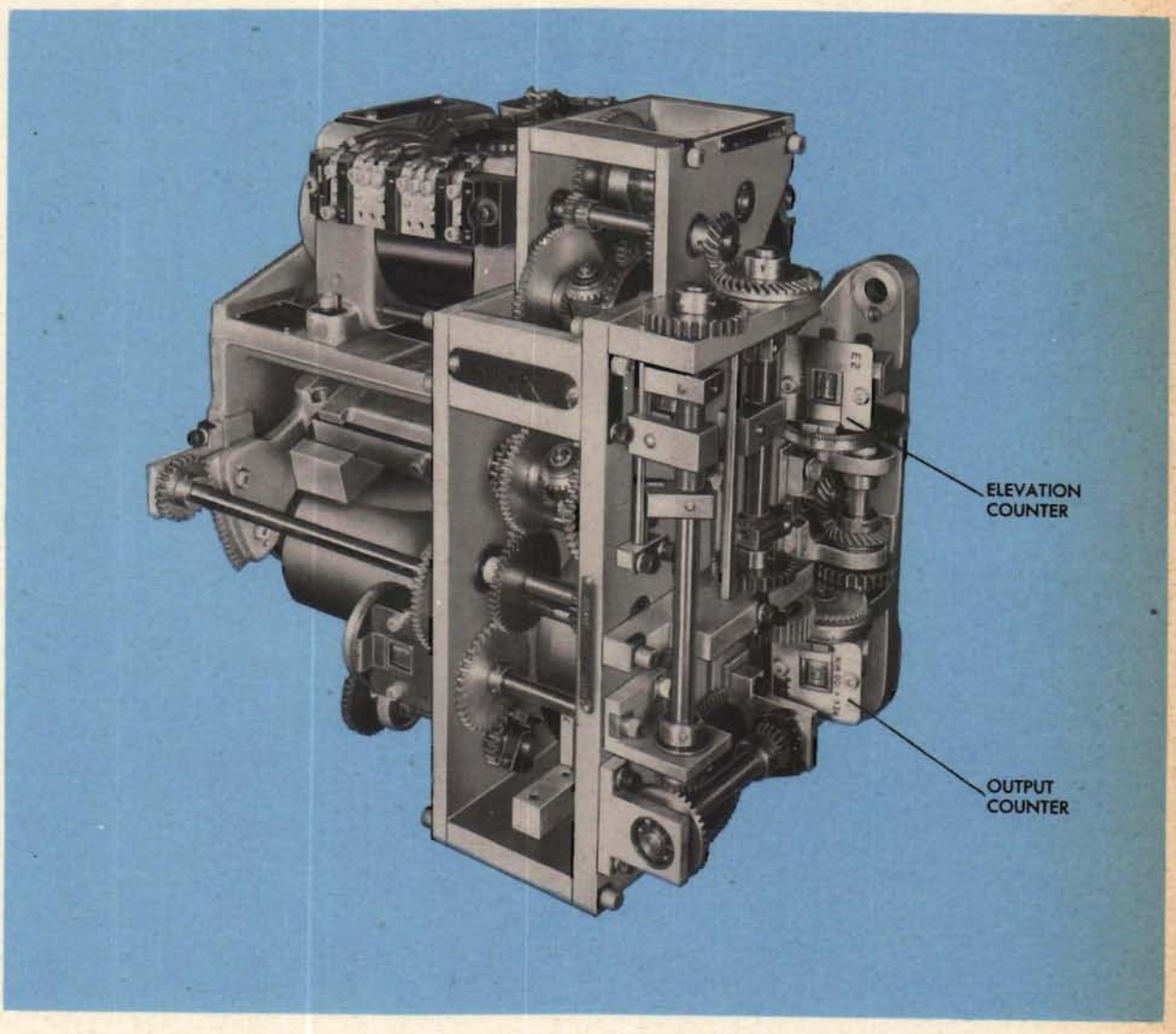

There are two types of ballistic computer: one with a magnetic drag follow-up, used in Computer Mark 1, and another with an oscillating follow-up, used in Range Keeper Mark 10. All Mark 10 fuze computers and all Mark 1 fuze computers of Ser. Nos. 781 and higher are regenerative. That is, the output, fuze, positions the cam.

This chapter is concerned specifically with the Mark 1 ballistic computer. In general, however, the symptoms, causes, and repairs discussed here are common to both types of unit. If a ballistic computer must be removed from the instrument for repair, consult the instrument OP for instructions.

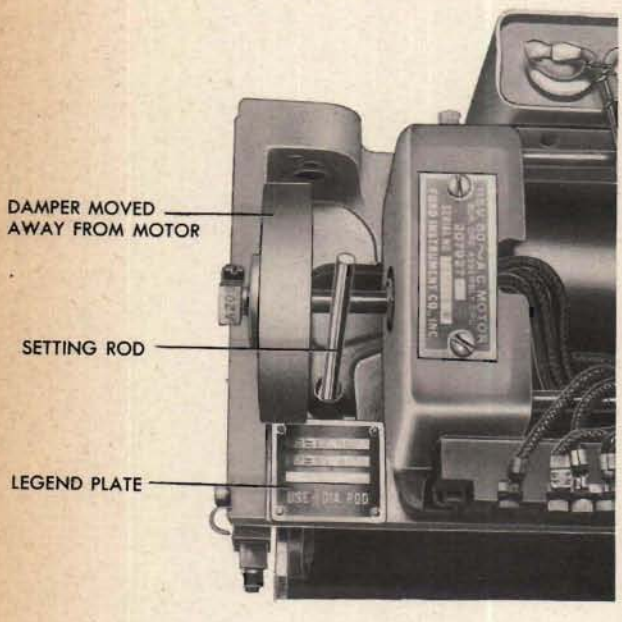

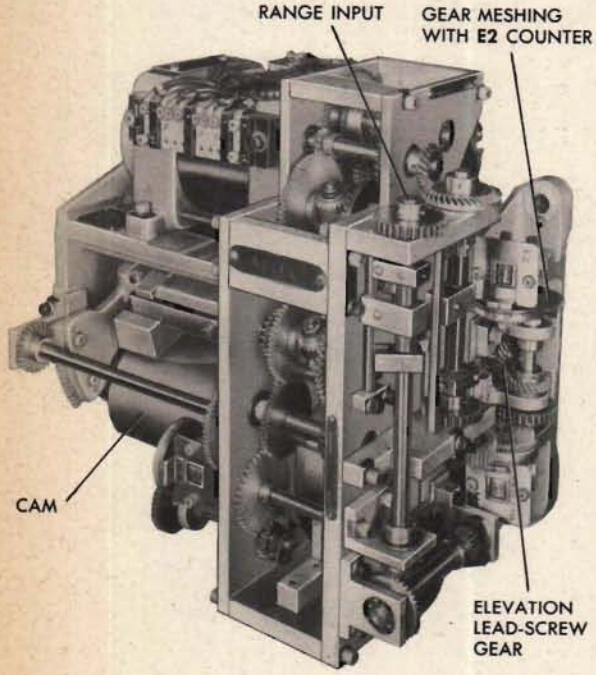

Typical symptoms

A test analysis and unit check test may have shown that the output values given by a ballistic computer do not agree with those on the ballistic test sheet or the instrument A-test sheet. Or a bench test of the unit may have indicated the same trouble: incorrect output. In either case, look for one or more of the following typical symptoms:

Electrical trouble

The follow-up motor has little or no torque, runs in only one direction, or runs away.

Mechanical trouble

SLIPPING: When a 3/16-inch setting rod is inserted through the follower arm and cam, the range and elevation input counters are not at the values indicated on the legend plate. When the cam is held by one hand, the range input can be turned with the other hand; or when the elevation lead screw is turned against one of its limits, the gear which meshes with the elevation counter can be further turned, while the lead screw does not rotate.

EXCESSIVE LOST MOTION: When one end of a shaft line is held, too much over-all play can be felt at the other end; or excessive lost motion due to wear can be felt between the traveling nut and lead screw.

JAMMING: The input or output gearing or the follow-up strongly resists moving.

STICKING: The input gearing moves sluggishly or resists moving past certain points. Or the output gearing may turn roughly and erratically when the power is ON, and resist moving or move sluggishly when the power is OFF.

Locating the cause

Electrical trouble

Weak servo-motor torque is usually caused by a faulty capacitor or defective wiring. No torque at all and one-way response both indicate an open lead or dirty or damaged contacts. Runaway response may be caused by reversed leads, contacts jammed together, or improperly assembled intermittent gearing.

It is not usually necessary to disassemble the unit in order to clean or replace contacts, repair the wiring, or replace a capacitor. Repairing or adjusting the follow-up gearing requires partial disassembly.

For specific and detailed discussions of the electrical parts of the ballistic computer, see the chapters on *The Servo Motor,* page 426; on *The Follow-up,* page 402; and on *Wiring,* page 380.

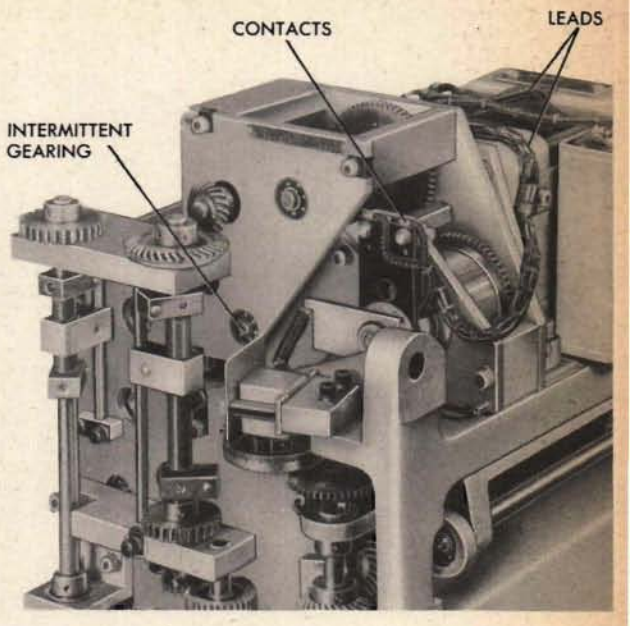

Mechanical trouble

If the electrical parts of the unit are operating normally and the cam is properly aligned, it is necessary to check the four shaft lines within the unit for jamming, sticking, excessive lost motion, or slipping. These four lines are the *elevation* and *range input lines* and the *cam* and *motor output lines.*

It is assumed that the trouble shooter is already familiar with the chapters in this OP on *Shaft Lines* and *Basic Repair Operations.*

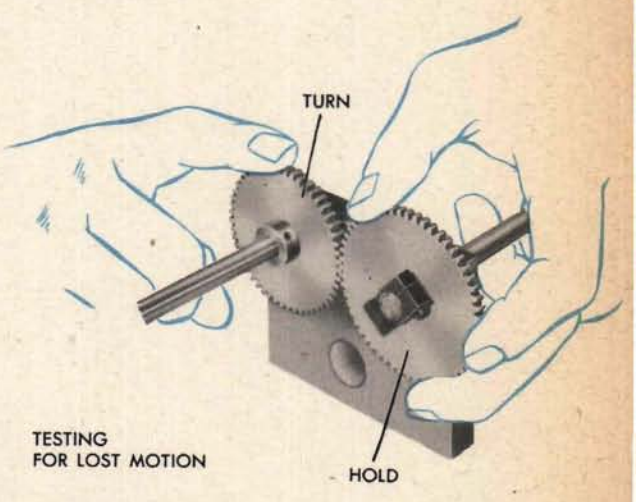

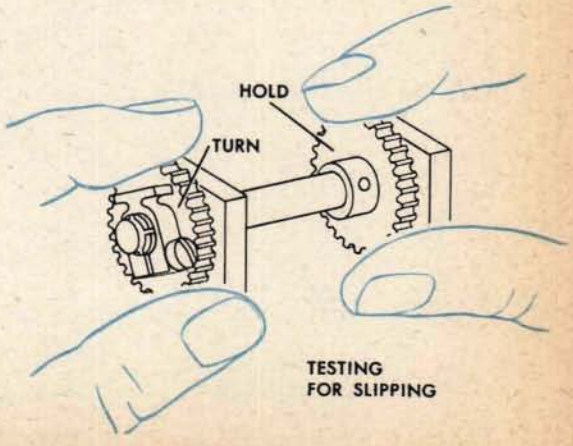

Isolating the four shaft lines

In order to check the four shaft lines within the unit, each line must be mechanically isolated from the others.

The following explanation of the method of isolating the lines for checking is presented in terms of jamming or sticking. This method can also be applied to locating excessive lost motion or slipping. Refer to SLIPPING and EXCESSIVE LOST MOTION, page 344.

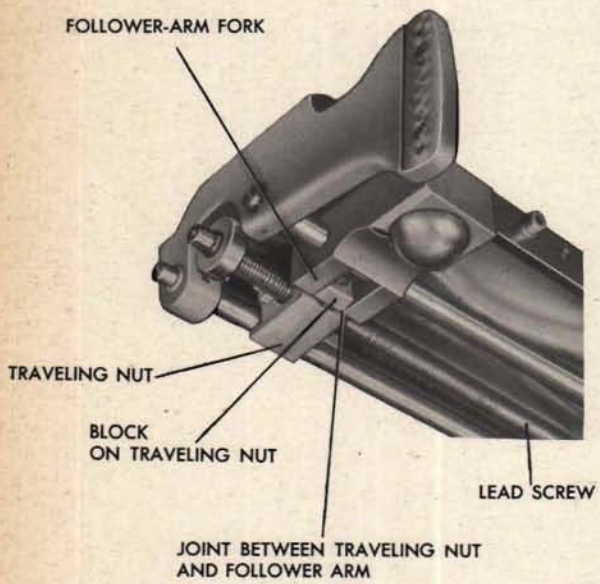

The unit should be disassembled and parts replaced only if wear has caused excessive lost motion between the lead screw and the traveling nut, in the joint between the block on the traveling nut and the follower-arm fork, or in gear meshes between plate-mounted shaft assemblies.

In general, the best procedure is to turn each line separately by hand when the power is OFF, in order to locate the particular shaft line which is not operating normally.

Always eliminate the possibility that a counter is jamming or sticking before checking the shaft line further. A counter may be loosened or even removed for repair without disturbing the adjustments, provided the shaft line is still connected to the main counter in the instrument. If the input shaft of a jammed counter has sheared off or is slipping through the small clamp which holds it, the whole line may stick.

Counters are discussed in a separate chapter, page 148.

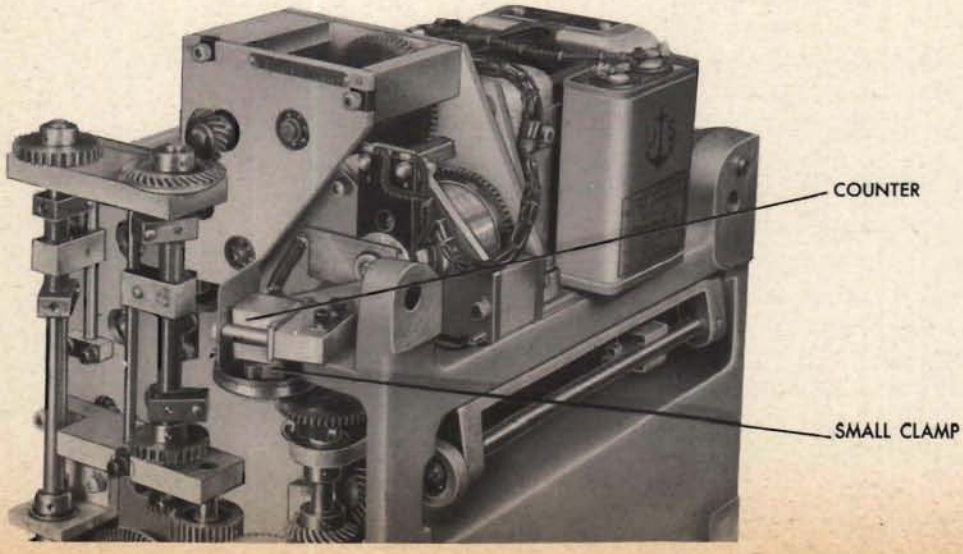

To isolate the elevation input line, first lift the follower frame so that the follower and the cam are disengaged. Then turn the line by rotating the gear next to the elevation counter. If the line jams or sticks, refer to the section on checking the elevation input line, pages 348-349. If it operates normally, isolate the range input and cam output lines.

To isolate the range input and cam output lines, first lift the follower frame to disengage the follower from the cam. Then turn the range input gear. This will normally turn the range input line, the cam, and the follow-up input gearing.

If they jam or stick, hold the range input gear and let the follower frame go down slowly by its own weight. If it goes down easily without jamming or sticking, the cause of the trouble is probably in the range input line. Refer to the section in this chapter on checking the range input line, page 350.

If the follower frame does not go down normally, the cause of the trouble is probably in the cam output line. Refer to the section on checking this line, page 350.

If both lines jam or stick, the cause may be in one of the differentials or in the follow-up input gearing. Refer to the chapter on the bevel gear differential, page 174, or the chapter on the follow-up, page 402.

If both lines operate normally, isolate the motor output gearing.

To isolate the motor output gearing, turn the servo-motor shaft extension. This will normally turn the motor output line and the response gearing. If it jams or sticks, refer to the section on the motor output gearing, page 351.

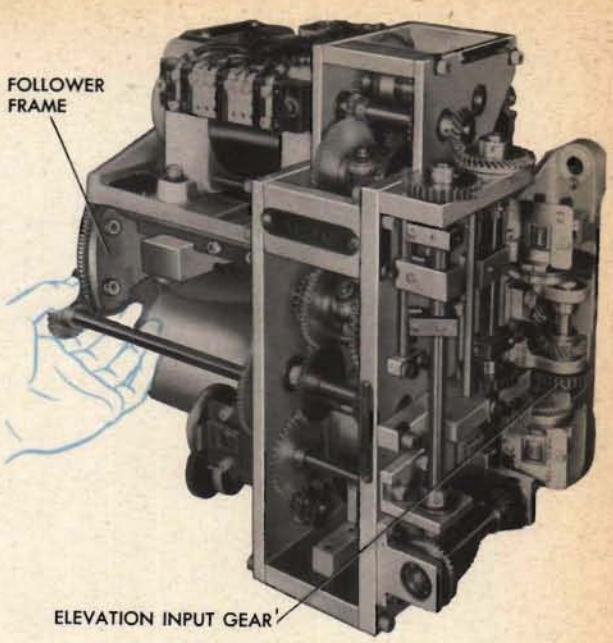

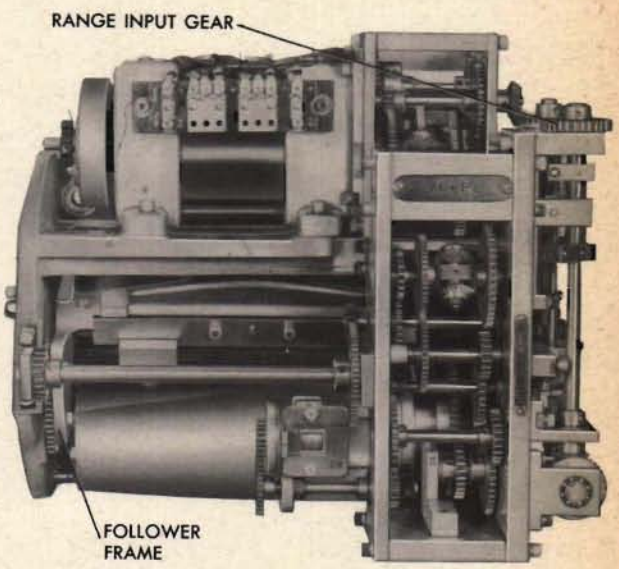

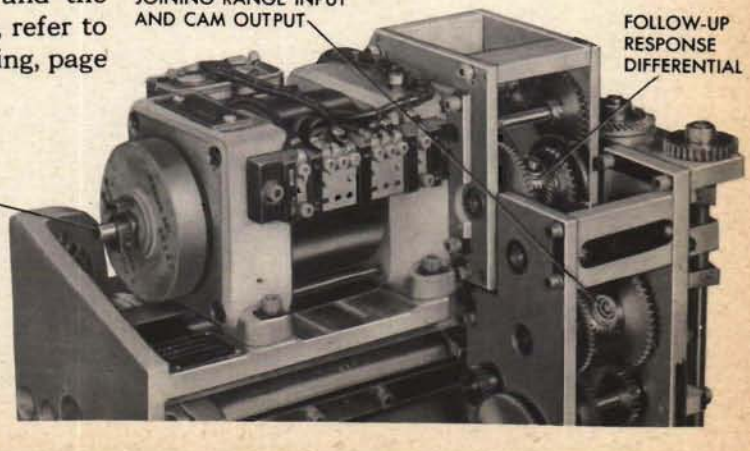

Elevation input line

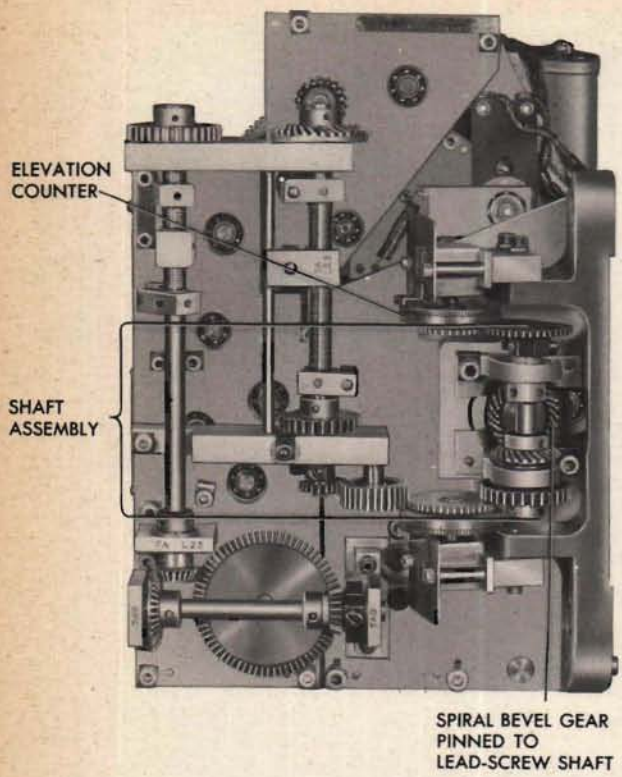

The elevation input line consists of a counter, a shaft assembly, a lead screw and traveling nut assembly, and a follower arm which is joined to the nut by means of a fork and block. The follower arm slides on a guide rod and against a guide rail. The steel-ball cam follower is mounted in the arm and slides on the cam.

To isolate this line, first lift the rocker arm so that the follower and the cam are disengaged. Then turn the line by rotating the gear next to the elevation counter.

If the line jams or sticks, the cause may be: dirty or damaged bearings or gears, or a tight gear mesh; a bent, dirty, damaged, or dry lead screw, traveling nut, or guide rod; a dirty, bent, or damaged pivot rod; or interference of parts, such as a counter drum rubbing on an adjacent part of the unit.

A tight gear mesh feels heavy, or like a ratchet device when the line is turned by hand. Dirty or damaged gear teeth or bearings can usually be detected by a feeling of intermittent binding, or roughness, when the line is turned.

Dirty or dry parts can usually be cleaned and lubricated without disassembly of the unit, and minor nicks in threads or gear teeth repaired in place. But a damaged lead screw or traveling nut usually must be removed from the unit for repair or replacement.

The elevation lead screw of a Mark 1 ballistic computer is designed to function as a limit stop, and therefore the traveling nut is not likely to jam against its limit.

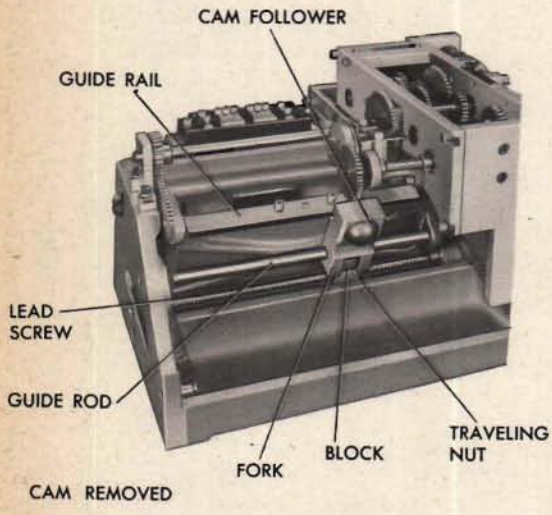

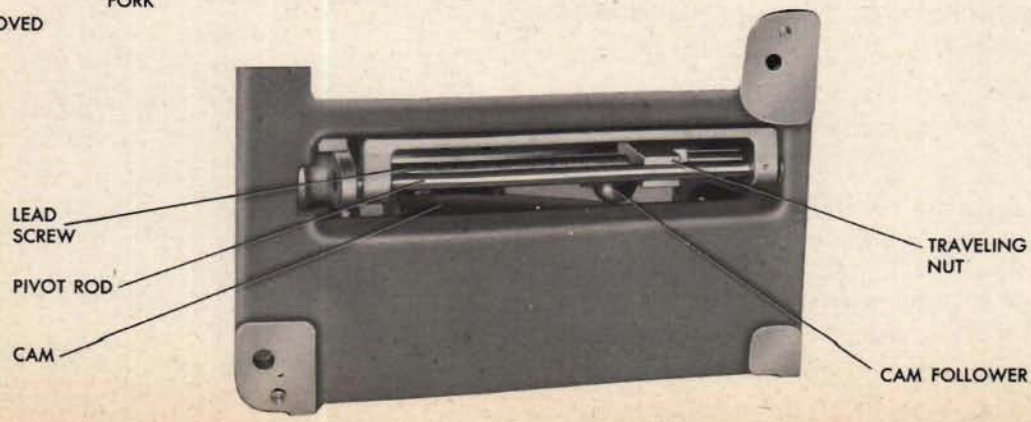

If the nut should jam at either limit of its travel, it can probably be backed out of its jammed position by hand and may not require any repair.

In the Mark 10 unit, however, the elevation lead screw does not function as a limit stop. It can be out of adjustment with the elevation limit stop so that the follower jams at either end of its travel. Consult the instrument OD for instructions on adjusting the limit stop. If the limit stop cannot be adjusted properly or needs repair, refer to page 106.

A bent lead screw usually turns stiffly at one point during each revolution in the proximity of the bend. The screw ordinarily cannot be straightened by hand, hence should be replaced.

A bent guide rod will cause increasing or decreasing stiffness of movement throughout the travel of the nut. A bent guide rod can be straightened in the same way as a bent shaft. See pages 68 and 69.

A dirty or damaged lead-screw thread, guide rod, or rail may cause a feeling of stiffness only once in the entire travel of the nut. Damaged threads in the traveling nut or a dry lead screw or rod may cause a constant feeling of stiffness throughout the normal travel.

The lead screw is steel, and the nut aluminum. Do not use the nut to run in a damaged screw thread, because it will cut away the aluminum. Do not use a tap for the nut or a die for the screw because both are double-threaded. Small nicks on the threads of the lead screw may be removed, or smoothed out with a fine jeweler's file. Excessive lost motion between the screw and nut requires replacement of the nut at least.

A damaged guide rail must be replaced because it must have an absolutely flat surface. Never try to smooth out a nick in a guide rail.

In general, the amount of disassembly required will be determined by the particular casualty which is found. Carefully examine the faulty part, the connected and adjacent mechanisms, and follow the appropriate steps of the disassembly procedure.

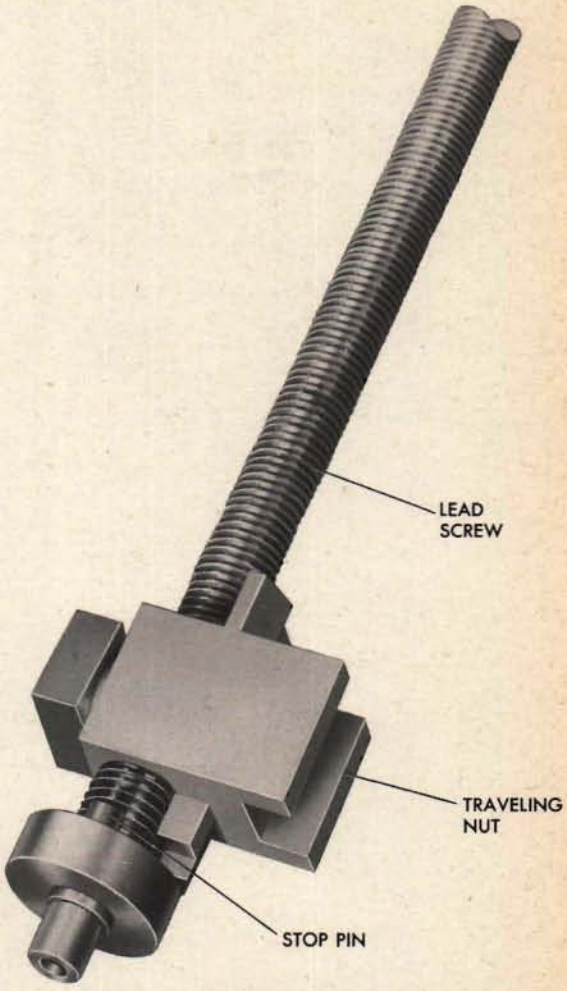

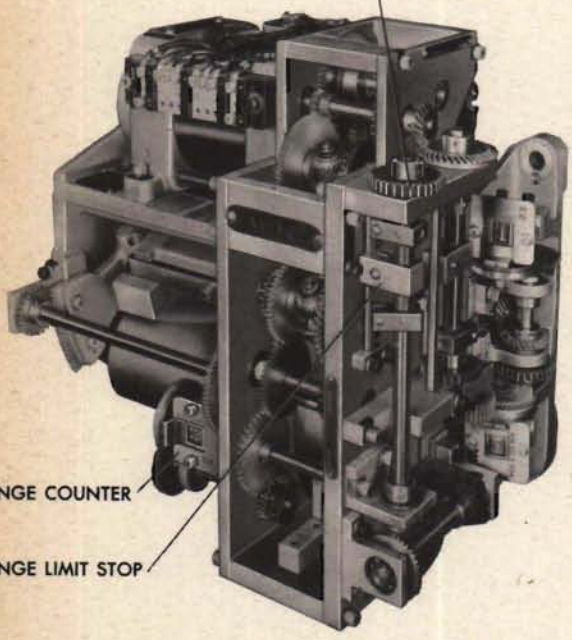

Range input line

The range input line consists of a counter, a limit stop, and the gearing to the cam and the follow-up control. The range line turns the cam and joins the cam output line to turn the follow-up control gearing. When an output line is turned with the servo power OFF, do not mistake the normal resistance of the intermittent gearing for sticking. To prevent possible trouble in the cam output line from loading the range line, hold the follower away from the cam as described in the section on isolating the four shaft lines, page 347.

First examine the counter for jamming or sticking. If the counter operates normally, jamming or sticking in the range line may be caused by: dirty or damaged gears or bearings, including the cam and follow-up bearings, or interference of parts.

If jamming of the range limit stop prevents turning of the range line, refer to the section on the limit stop, page 106.

Dirt and foreign matter can often be removed and minor damage repaired without disassembly.

Trouble found in the follow-up usually requires disassembly. The follow-up can be conveniently removed and treated separately, because its removal upsets only the synchronizing adjustment.

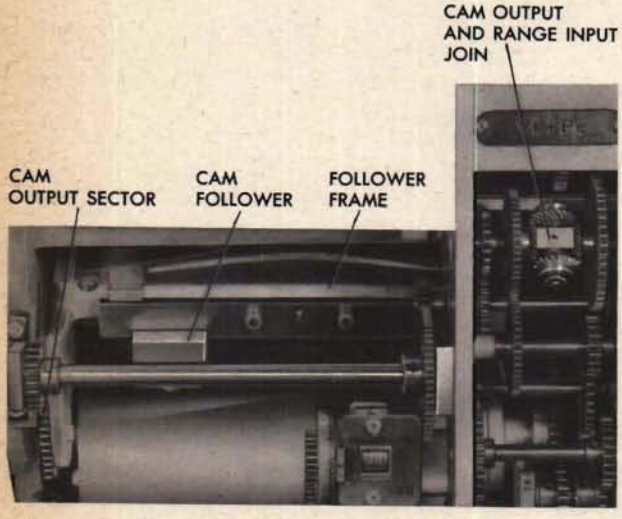

CAM OUTPUT LINE

Cam output line

The cam output line consists of the cam follower, the follower frame, the output sector, and the gearing which joins the range input line to turn the follow-up control. The follower frame can be moved by hand, as explained in the section on isolating the four shaft lines. Moving it will cause the follow-up control to click.

Jamming or sticking in the cam output line may be caused by dirty or damaged gears or bearings. Serious jamming or sticking of the follower frame pivot or the cam follower joint may prevent the springs on the follower frame from holding the guide rail, the cam follower, and the cam in close contact with each other. Then a false signal will be sent to the follow-up control.

The cam-follower joint, the follower-frame bearings, or the shaft assemblies can usually be cleaned and lubricated while the unit is in the instrument. However, repair or replacement of these parts requires disassembly.

Inspect the cam closely for damage of any kind. A damaged cam should be replaced. Check for misalignment of the cam by determining whether or not its axis is parallel to the follower-arm guide rail, as explained on page 365.

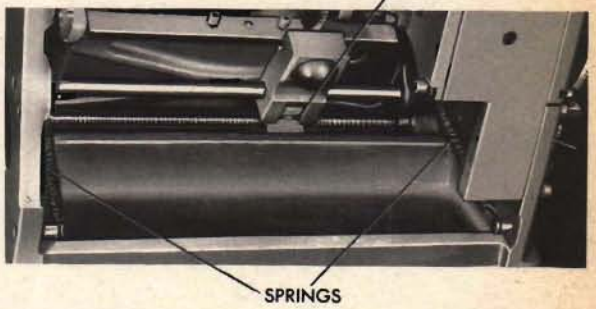

Motor output gearing

The rotor shaft is connected by gearing to the follow-up output gear, a limit stop, a counter, and response gearing back to the follow-up control.

First examine the counter for jamming or sticking. If it operates normally, the trouble may be caused by dirt, damage, or interference at the gear meshes, in the bearings, or in any of the mechanisms in the line. The output gearing can usually be cleaned, lubricated, or repaired while the unit is in the instrument.

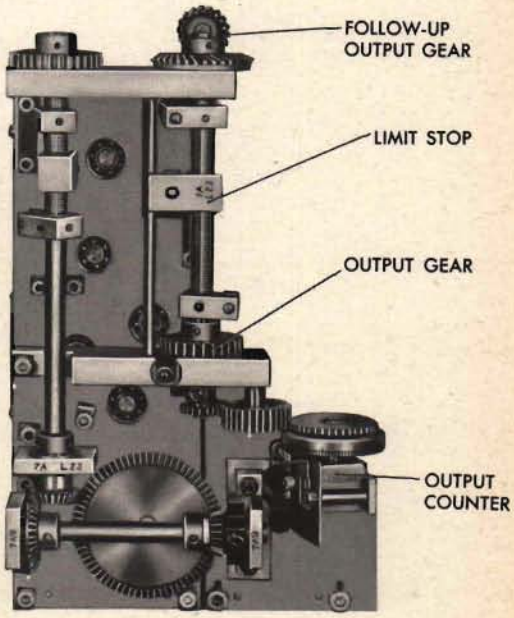

Disassembling the unit

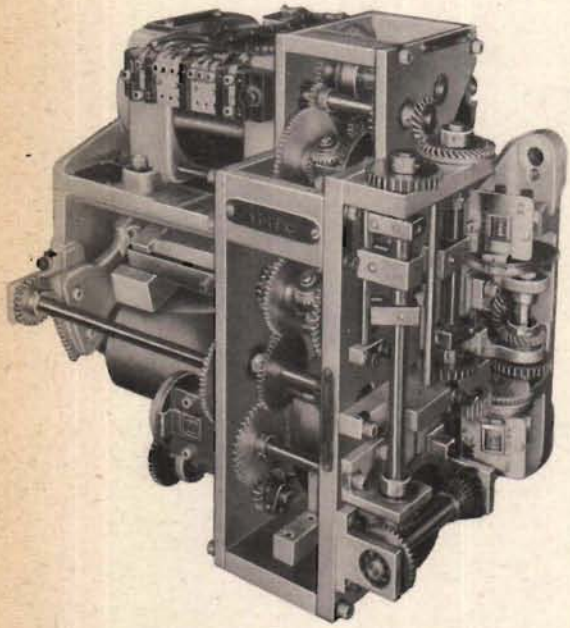

The unit pictured here is the $Vf + Pe$ unit, No. 7A, but the disassembly procedure applies in general to all ballistic computers. The subassemblies can be removed in various orders according to the requirements of different repair jobs. The follow-up, the cam, and the interconnecting gearing can be removed separately. Before the elevation screw and the rocker frame can be removed, however, the cam must be removed.

Removing the cam assembly

1 Remove the two No. 8 screws from the adapters at each end of the cam shaft. Push the adapter at the small end of the cam inward, away from the casting.

2 Carefully lift out the cam.

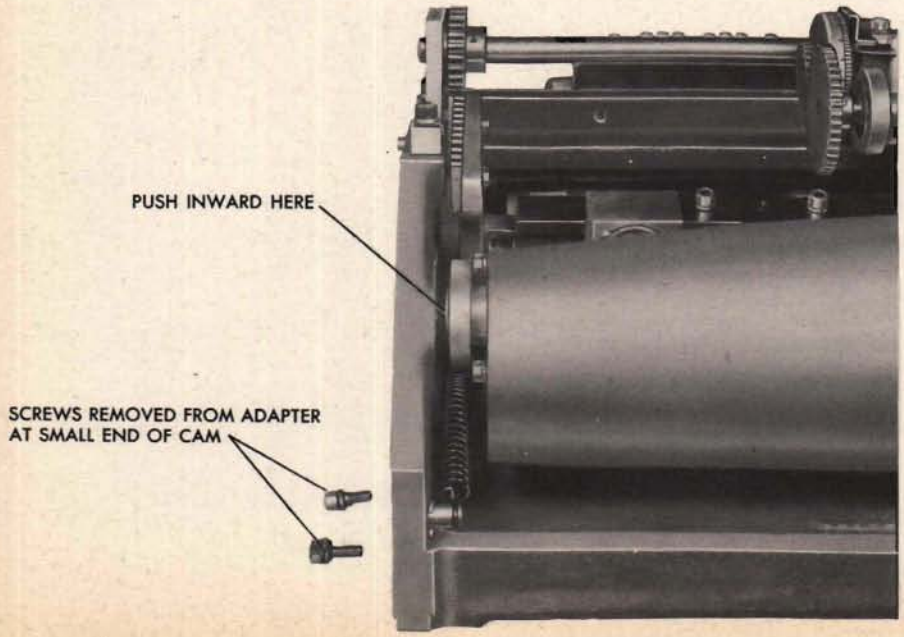

Disassembling the cam assembly

1 Unscrew as far as possible the three No. 8 screws securing the bearing in the gear end of the cam.

2 Push the cam shaft out as far as it will go. Remove the three No. 8 screws, and carefully slide the shaft out of the cam.

3 Remove the bearing at the small end of the cam by taking out the three No. 8 screws.

4 Remove the three No. 8 screws which hold the doweled gear on the cam, and remove the gear.

5 If it is necessary to remove the bearing or the adapter from the shaft, carefully drive out the adapter taper pin.

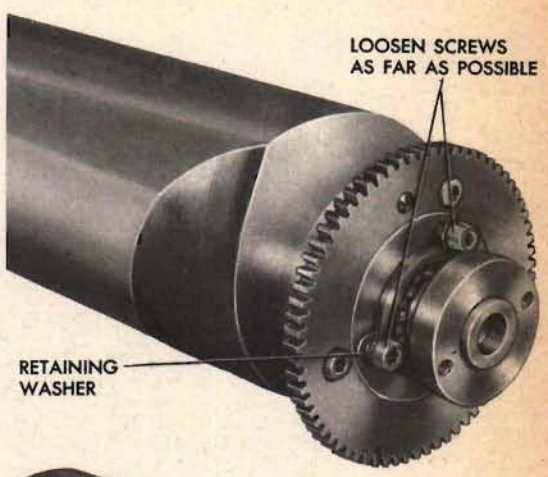

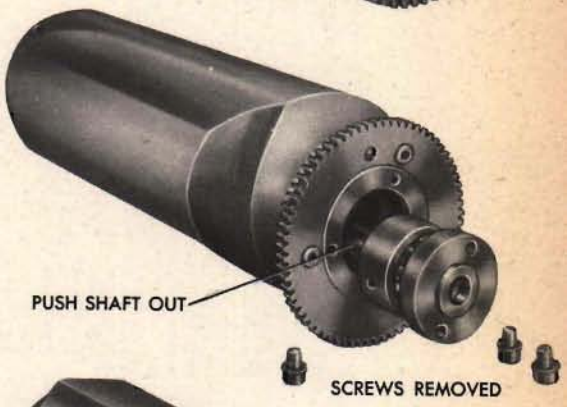

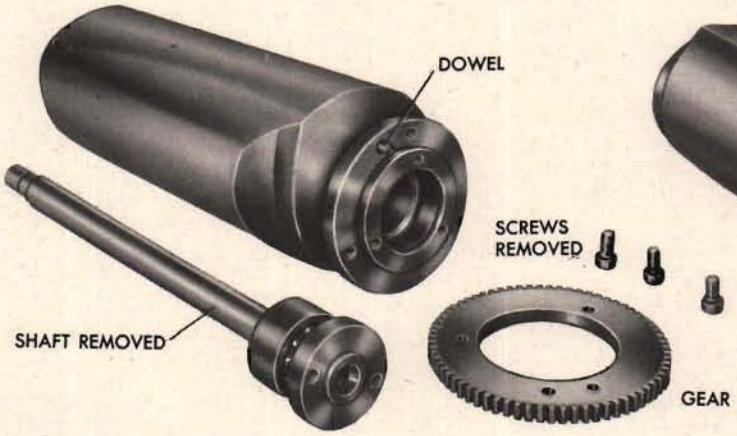

Removing the follow-up

Take out the four No. 10 screws and lift off the follow-up.

Disassembling the follow-up

See the chapter *The Follow-up* in this OP.

Removing the connecting gearing

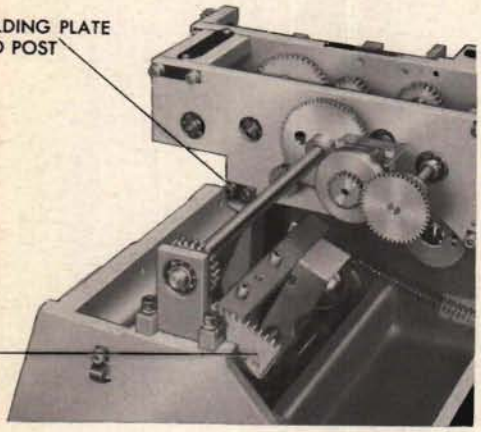

1 Remove the two No. 8 screws from the hanger at the sector gear mesh and the two No. 8 screws connecting the plate to the post doweled to the casting.

2 From the back of the plate remove the two No. 8 screws holding the limit-stop hanger.

3 Remove the screws holding the limit-stop hangers to the front of the gear box. Lift off the limit-stop assemblies.

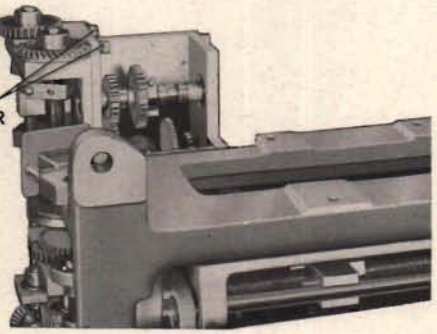

4 Remove shaft assembly 7A9 by taking out the hanger screws.

5 Remove the two No. 10 screws holding the casting and the gear box together and the two No. 8 screws holding the gear box to the doweled post. Back the gear box off its dowels and lift it up

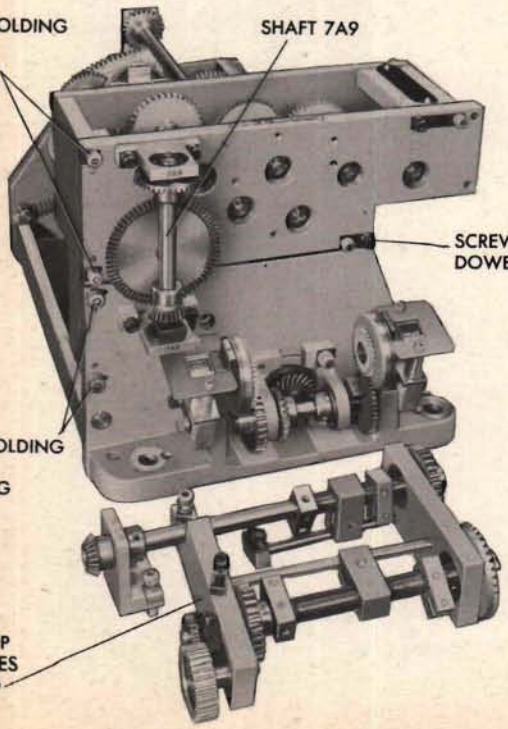

6 To remove any plate-mounted shaft assemblies from the gear box, remove the four No. 10 screws which hold the box assembly together.

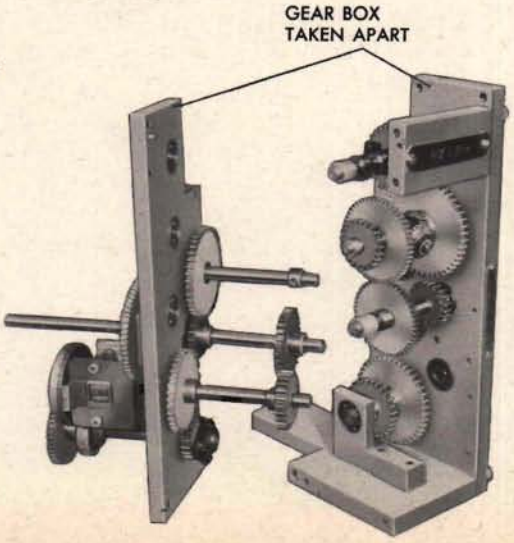

Removing the lead screw and the follower frame

1 Remove the elevation counter by taking out the two No. 6 screws.

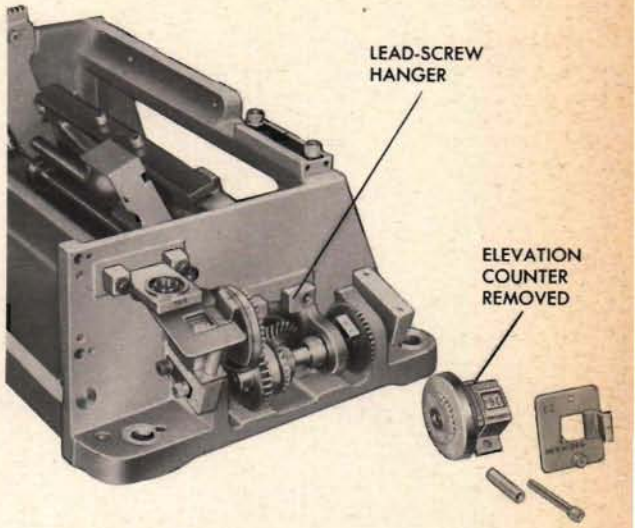

2 Run the traveling nut toward the sector gear and remove the two No. 10 screws which secure the lead-screw hanger to the casting. Pull the lead-screw hanger outward in order to release one end of the follower-frame pivot shaft.

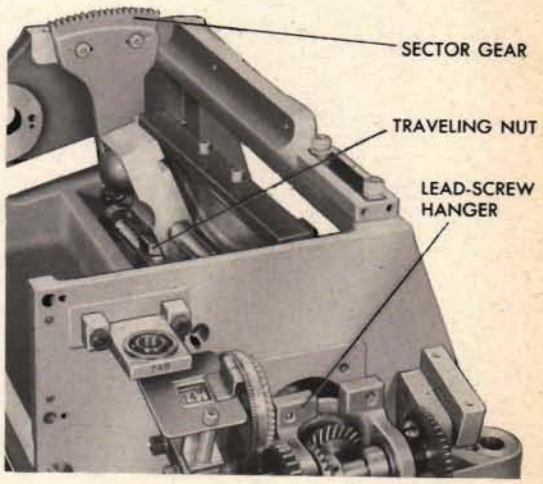

3 Unhook the springs from the follower frame, and turn the traveling nut to remove the traveling-nut block from the follower fork.

4 Pull the follower frame toward the lead-screw hanger in order to release the other pivot from its bearing, and lift out the follower frame. Remove the lead-screw assembly.

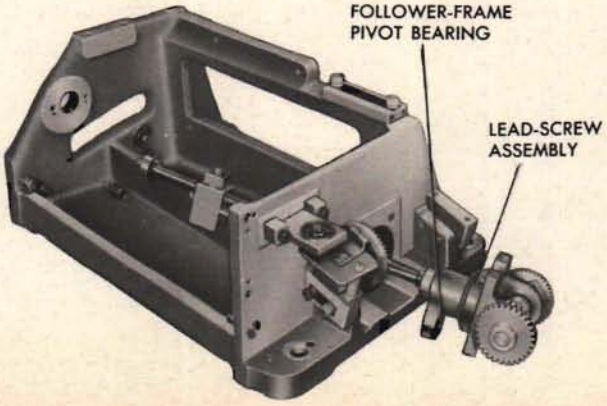

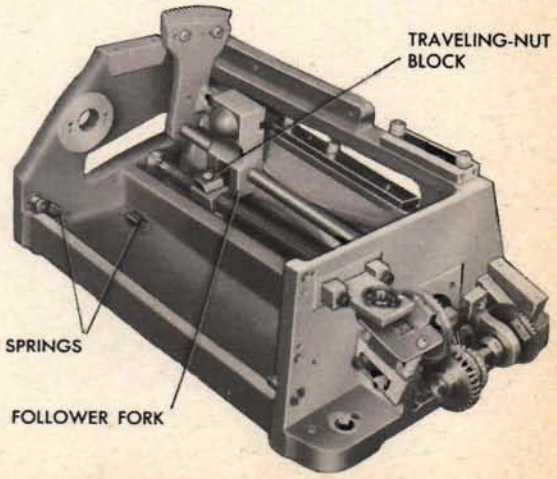

Disassembling the lead-screw assembly

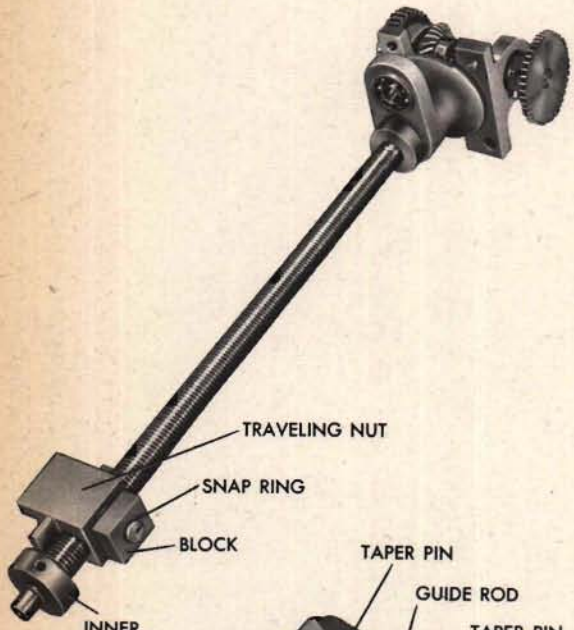

1 If necessary, the block on the traveling nut can be removed by taking off the snap ring.

2 To remove the traveling nut, carefully drive the taper pin out of the inner stop collar, pull the collar off the shaft, and turn the nut off the screw.

3 If it is necessary to remove the screw from the hanger, carefully drive out the taper pin from the bevel-gear hub at the end of the screw and pull out the screw.

Disassembling the follower-frame assembly

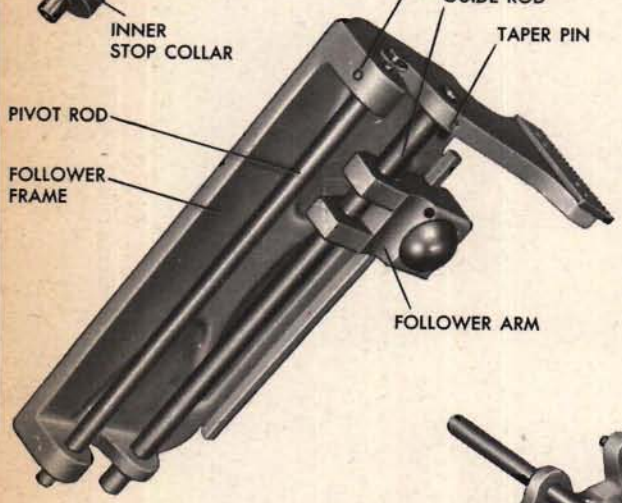

1 To remove the guide rod and follower arm, carefully drive out the guide-rod taper pin.

2 To remove the pivot rod, carefully drive out its taper pin.

3 To remove the ball from the follower arm, tap it lightly from the rear using an aluminum punch.

4 To remove the guide rail, take out the two No. 8 screws.

5 To remove the sector, take out the two No. 8 screws.

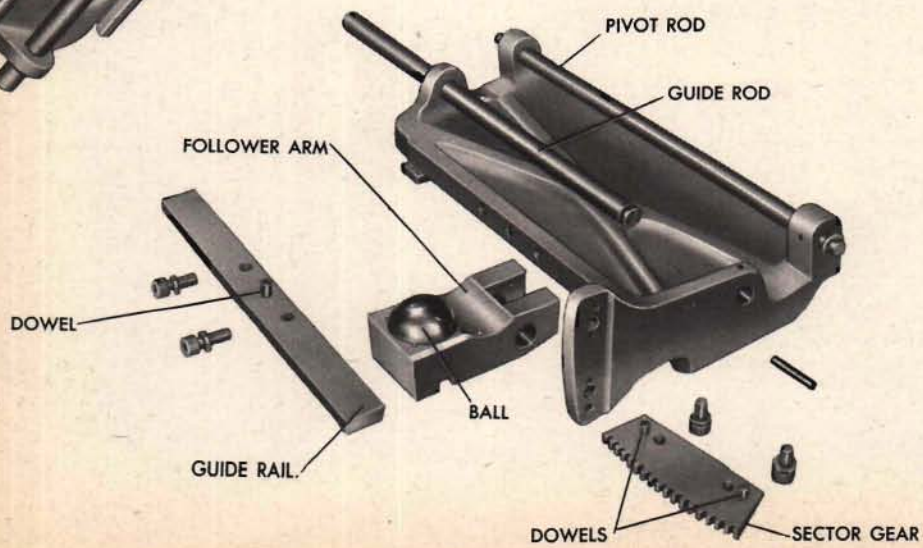

Reassembling each subassembly

In this reassembly procedure, each of the subassemblies is reassembled first. Then all are remounted on the casting.

Be careful to replace every spacer in exactly the same position from which it was removed. Clean and lubricate the cam and all bearings, screws, and gears before they are reassembled.

Reassembling the follower-frame assembly

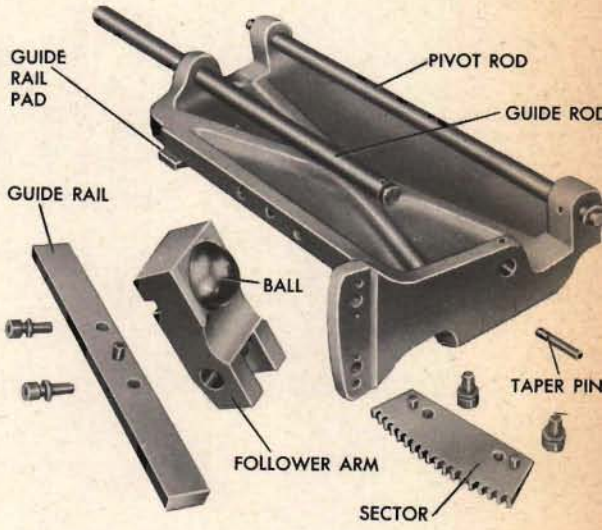

1 Put the ball in the follower arm and stake metal over the edge of the hole to keep the ball in place.

2 Slide the pivot rod in place. Drive in the taper pin and stake it in place.

3 Slide the guide rod through the hole in one side of the frame and slide the follower arm onto the rod. Slide the other end of the rod into place. Drive in the taper pin and stake it.

4 Mount the guide rail. Be sure that the dowel is in place, that the rail rests firmly at both ends against the pads, and that the rail is parallel to the guide rod and the pivot rod. Replace and tighten the screws.

5 Position the doweled sector gear on the follower frame and screw it in place. If a new sector is used, do not fit the dowels until the sector mesh has been made.

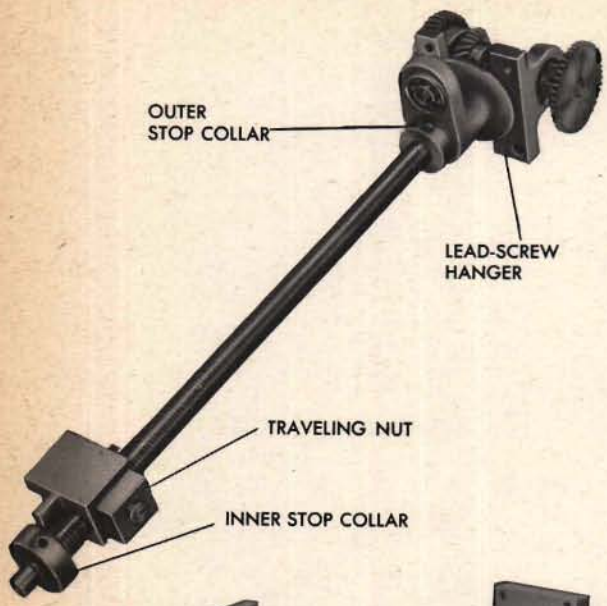

Reassembling the lead-screw assembly

1 Slide the lead screw through the lead-screw hanger and the bevel-gear hub. Repin the bevel gear.

2 Turn the traveling nut onto the lead screw. Slip the collar on and pin it.

If a new lead screw or stop collar is used, the follower-frame assembly, the lead-screw assembly, and the cam must be temporarily mounted in the casting in order to position the new parts with set screws before pinning. Place a 0.005-inch spacer on the inner end of the lead screw to establish its position with respect to the cam. Keeping a thrust against this spacer, adjust the two stop collars to the limits specified on the assembly drawing. Next fit a spacer between the outer stop collar and the bearing so that there is no end shake in the lead screw. Remove and discard the 0.005-inch spacer which was on the inner end of the lead screw and again eliminate end shake, this time by fitting a spacer between the bevel gear and the outer bearing. Thus the end play of the lead screw is controlled at the hanger end.

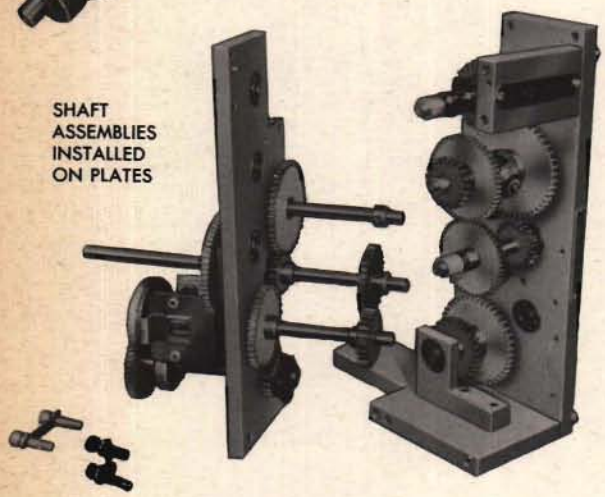

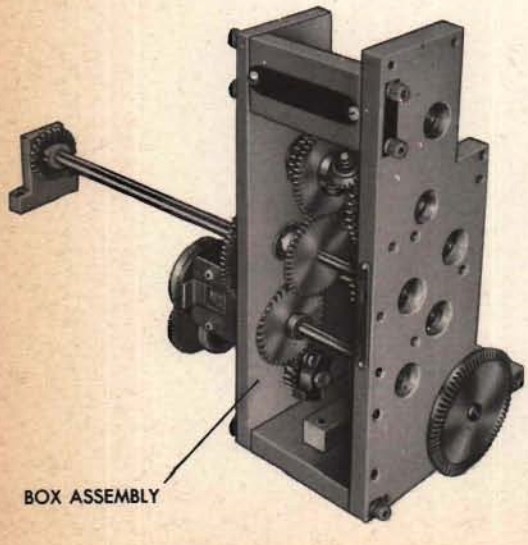

Reassembling the gear box

1 Refer to the assembly drawing for the correct positions of shafts and gears. Mount the shaft assemblies on the plates, being very careful to use the proper spacers.

2 Fit the box assembly together.

If a new gear or shaft is used, position the parts and hold them with set screws for drilling and pinning.

Reassembling the cam assembly

1 Fit the wide bearing and the adapter on the gear end of the cam shaft so that there is a minimum of end play. Repin the adapter.

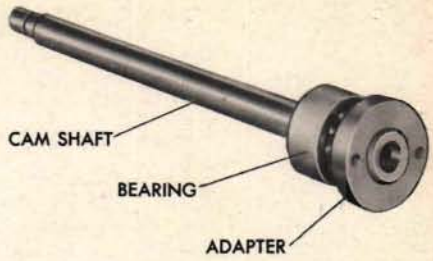

2 Place the gear on the cam so that the dowel goes through the dowel hole in the gear.

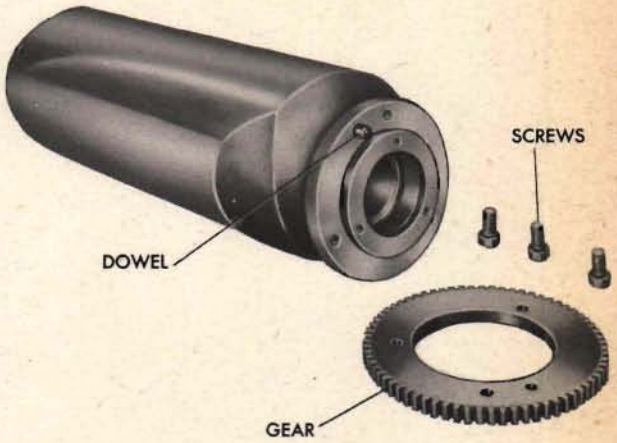

3 Seat the narrow bearing in the small end of the cam and secure it with the three screws and retaining washers.

4 Slide the shaft into the cam, and partially seat the bearing as shown. Insert the three screws and turn them until the retaining washers touch the bearing. Then seat the bearing completely and tighten the screws.

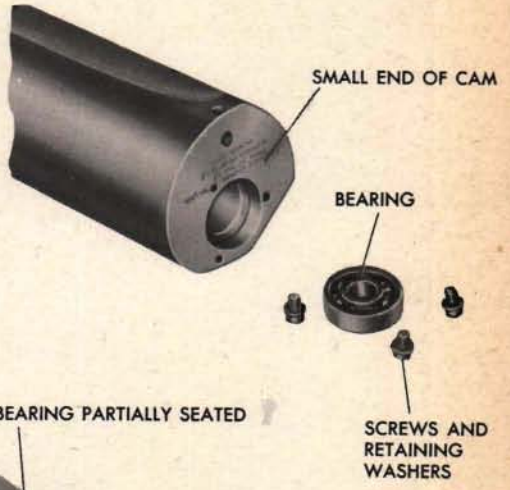

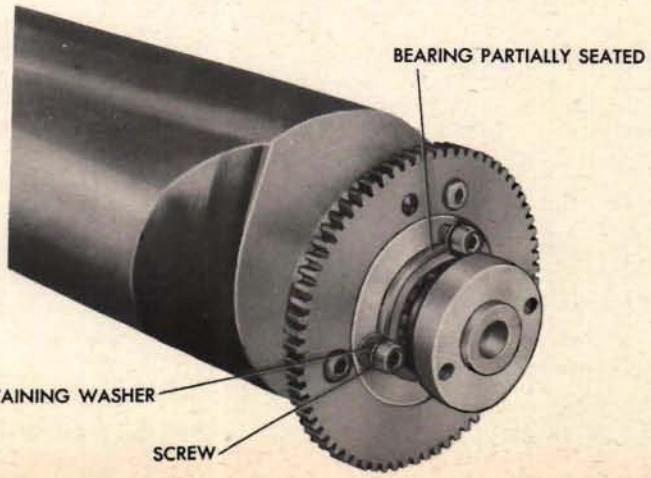

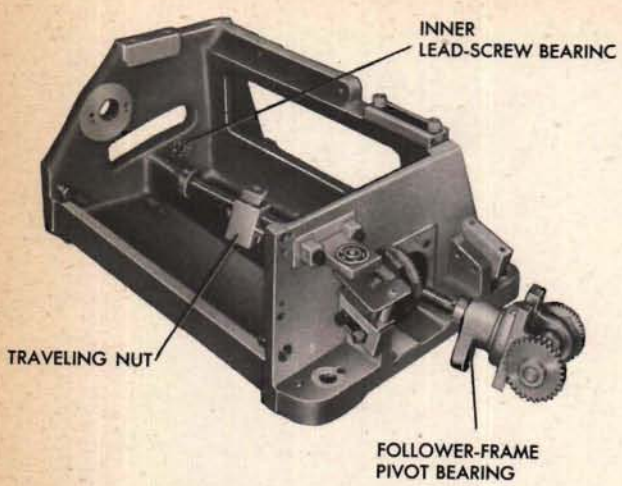

Reassembling the unit

As the subassemblies are mounted in place, position the shaft assemblies so that the gears mesh freely with an absolute minimum of lost motion.

1 With the traveling nut at the inner end of the lead screw, push the screw through the casting as shown.

2 Put the follower-frame assembly into position in the casting and slip the follower fork over the block on the traveling nut. Fit the inner end of the follower-frame pivot into its bearing. Then manipulate the lead-screw assembly so that the outer follower-frame pivot goes into the bearing on the lead-screw hanger, while the inner end of the lead screw goes into its inner bearing. Replace the two No. 10 screws in the lead-screw hanger.

3 Hook the two springs to the follower frame and the casting.

4 Make sure that the long graduations of the elevation-counter drum dial are aligned with the counter numbers and check the assembly clamp on the dial for tightness. Mount the counter assembly.

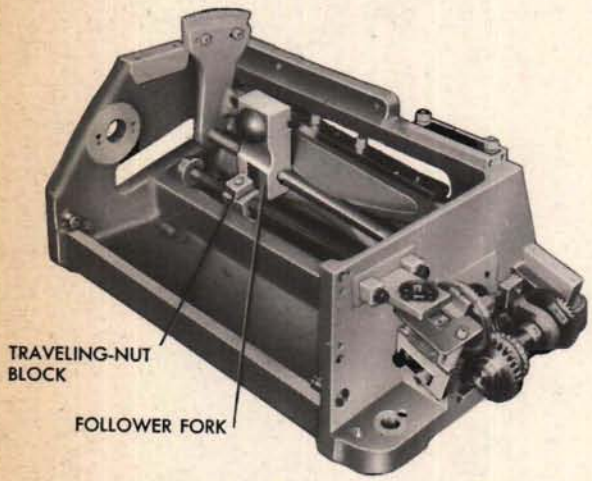

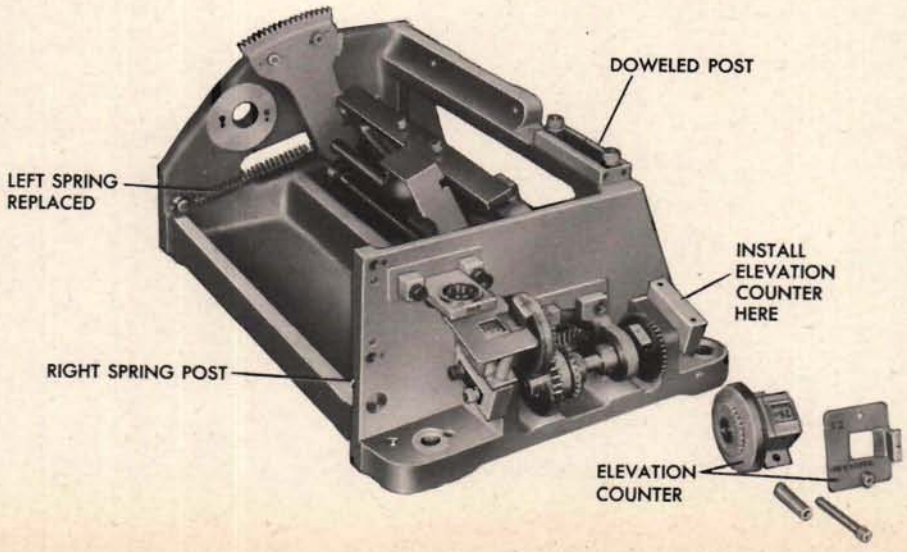

5 Mount the gear box on its dowels and over the doweled post still attached to the casting.

6 Mount the limit-stop assemblies, and shaft assembly 7A9.

7 Secure the hanger of shaft assembly 7A10 at the sector mesh.

8 Mount the follow-up.

9 Push the adapter onto the shaft at the small end of the cam. Install the cam assembly and secure the adapters through the casting at each end.

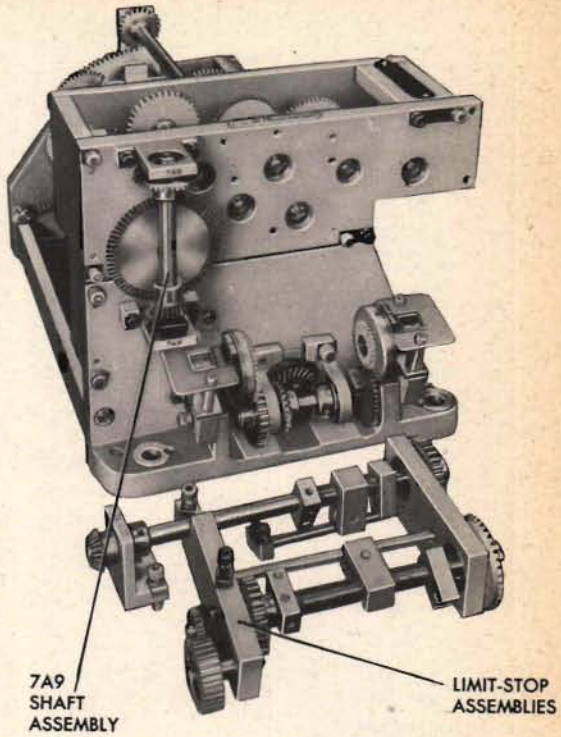

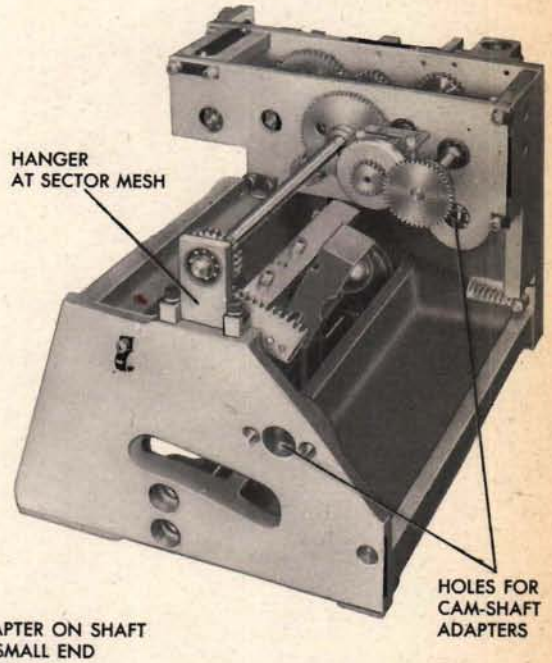

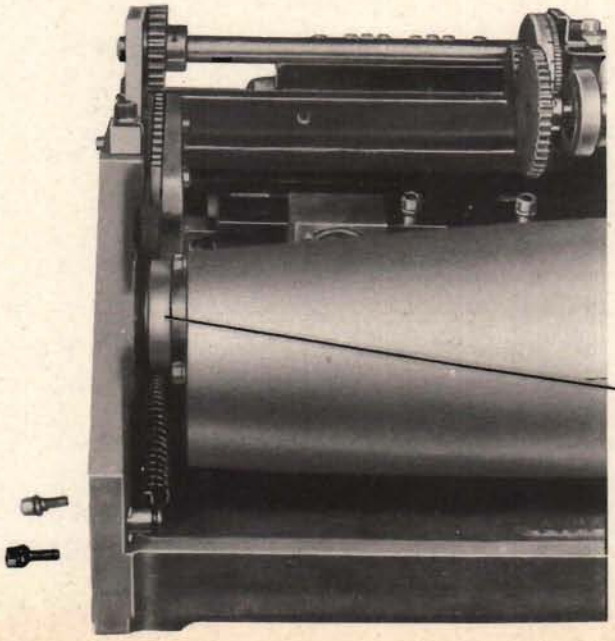

Bench checking the unit

Stand the ballistic computer in the position in which it is mounted in the instrument.

LONG GRADUATION ALIGNED WITH FIGURES

1 Check the unit against the assembly drawing.

2 Check the gearing for ease of operation and lost motion.

3 Check all the assembly clamps for tightness.

4 Check the counter drums for alignment of the long graduations with the figures.

DATA ON SMALL END OF CAM

5 Apply 110-volt 60-cycle power to the single and double-letter bus bars of the motor terminal block. Check that the follow-up output shaft follows the dictates of the input shaft.

6 Check the data stamped on the small end of the cam to make sure that the cam is the correct one for the instrument being repaired.

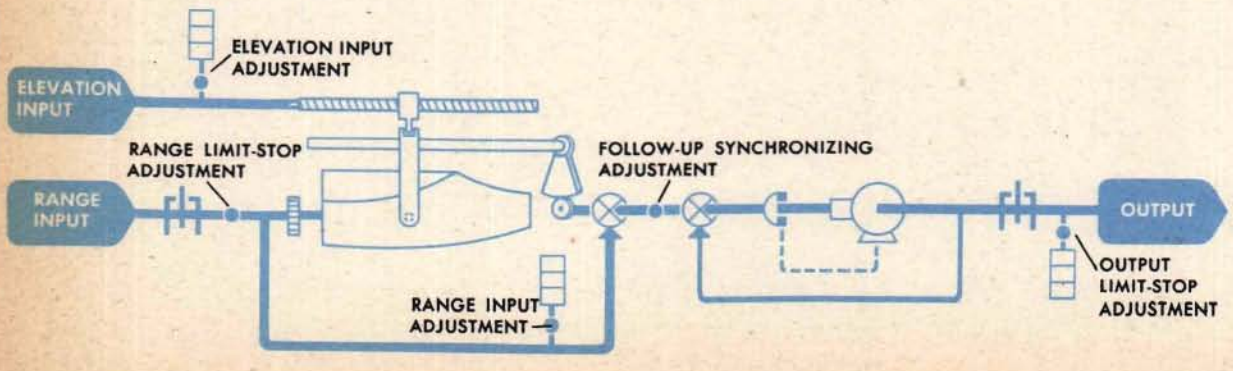

Adjustment and test data

The ballistic computer should be fully readjusted to give a satisfactory set of test readings before being installed in the instrument.

First obtain the correct ballistic computer adjusting and testing information for the particular Mark and Mod of the instrument being repaired. For the Computer Mark 1, adjusting instructions are available under *Factory Adjustment Procedure,* OP 1064A, and test forms may be obtained from the NIO final acceptance test sheets. For the Range Keeper Mark 10, all the necessary information for both adjusting and testing may be found in the applicable OD.

TYPICAL BALLISTIC COMPUTER TEST

(Vf+Pe) (MIN.)

R2	500 YDS.			3000 YDS.			6000 YDS.			8000 YDS.		
E2	CALC.	READ.	ERROR	CALC.	READ.	ERROR	CALC.	READ.	ERROR	CALC.	READ.	ERROR
0°	82.6			105.4			249.8			400.7		
30°	71.0			95.0			233.9			381.5		
50°	51.8			69.1			174.9			287.5		
70°	27.5			36.0			92.6			151.3		
TOTAL ERROR												

R2	10000 YDS.			12000 YDS.			14000 YDS.			16000 YDS.		
E2	CALC.	READ.	ERROR	CALC.	READ.	ERROR	CALC.	READ.	ERROR	CALC.	READ.	ERROR
0°	613.3			898.7			1259.4			1720.8		
30°	589.3			885.9								
50°	450.2			711.8								
70°	238.1											
TOTAL ERROR												

GRAND TOTAL ERROR (25 READINGS) _____ MIN.
AVERAGE ERROR _____ MIN.
MAJORITY ERROR _____ MIN.
MAXIMUM ERROR _____ MIN.

ALLOW. AVG. & MAJ. ERROR = 2 MIN.
ALLOW. MAX. ERROR = 6 MIN.

REGENERATIVE FUZE BALLISTIC COMPUTER USED IN COMPUTER MK 1, SER. NOS. 781 AND HIGHER

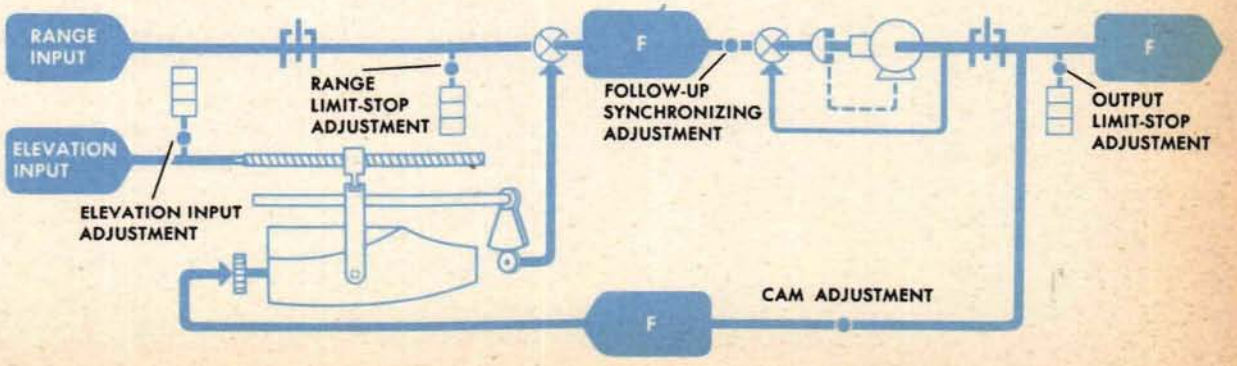

Adjusting and testing a ballistic computer

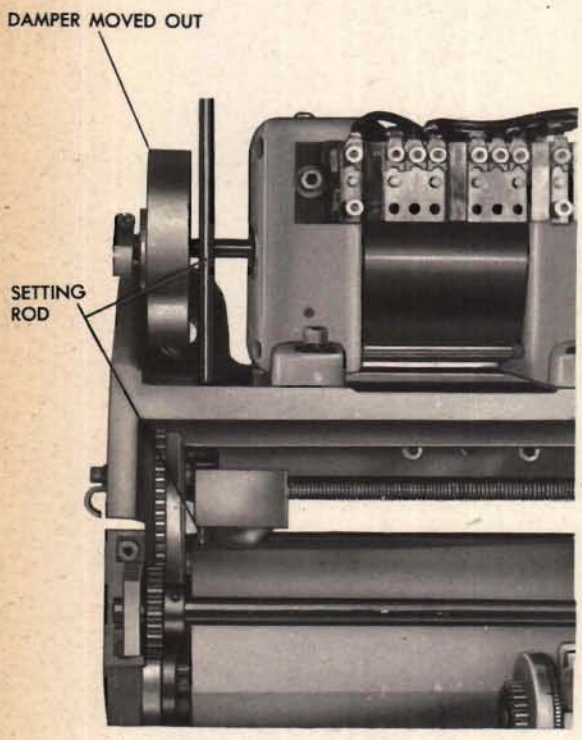

Before starting the adjustment procedure on a ballistic computer which has been repaired, loosen all the adjustment clamps.

The adjusting instructions call for insertion of a 3/16-inch setting rod through the follower and cam. Before attempting to insert the setting rod, loosen the damper and move it out toward the end of the motor shaft. This will provide a clear path for the setting rod. Be sure that the 3/16-inch setting rod is a free fit in the follower and cam. If not, it should be polished down until there is no danger of its jamming.

When the adjustments have been completed, take a full set of test readings. Following the test form for the particular ballistic computer being serviced, set *E2* at the first value given and hold it with a wedge. Position the range counter at each of the values listed for that elevation, recording the output counter readings on a test form. Repeat this for each value of *E2,* and when all the readings have been taken, compute the errors. If the errors exceed the allowable values given on the test form, they may be improved by refining the adjustment between the cam and its input or the adjustment between the lead screw and its input.

Correcting cam and follower alignment

If the test readings are still unsatisfactory after refining the adjustments as much as possible, analyze the errors for nonparallelism between the cam axis and the guide rail. This trouble will be indicated if the errors for a given range build up in a fixed direction as elevation is changed from 0° to 90°.

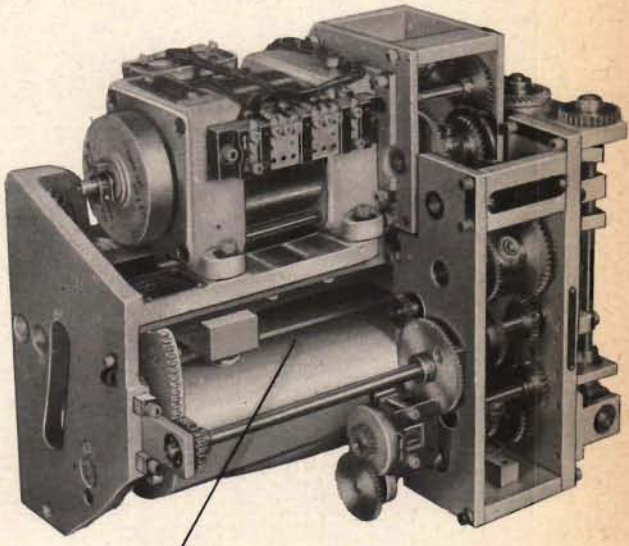

To check this further, rotate the cam so that the follower is on the constant-radius portion, and lock the cam. Change elevation from one limit to the other while observing the output counter. Any movement of the counter indicates nonparallelism.

To correct this condition, remove the upper dowel from the lead-screw hanger and make the two No. 10 screws slip-tight. Pivoting the hanger on its remaining dowel, move it in the direction which improves the test readings. When the best position for the lead-screw hanger is determined, tighten the screws and fit an oversize dowel in the upper dowel hole.

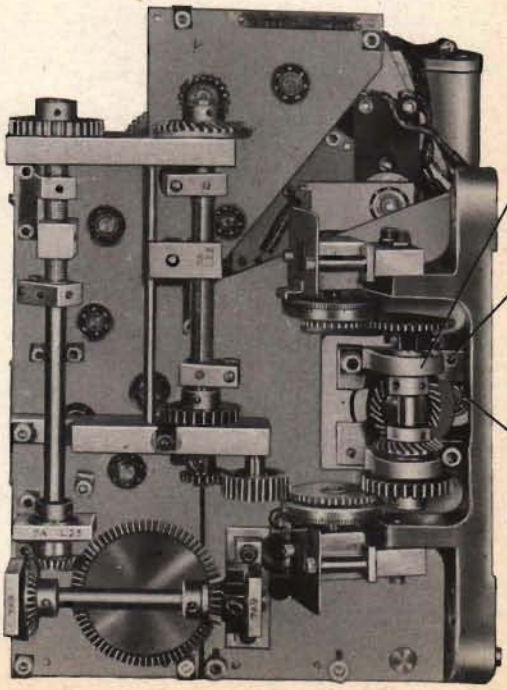

When the adjustments are complete and the test readings satisfactory, the range limit stop should be rechecked. Also, make sure that the elevation line can be turned from 0° to 90°.

COMPUTING CAMS

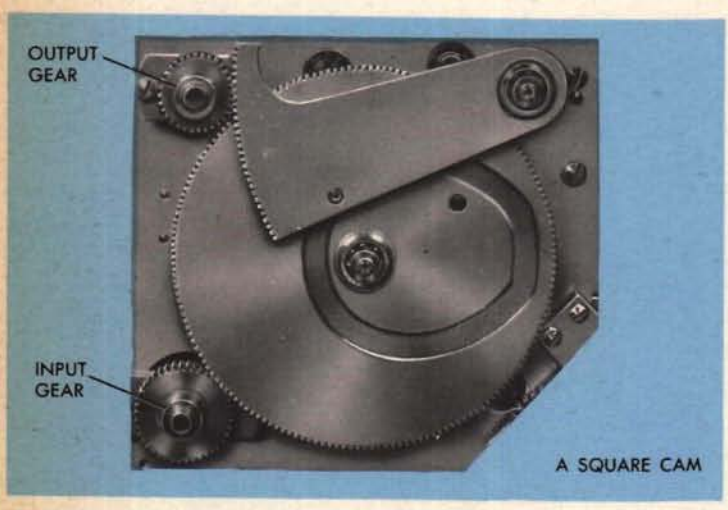

A SQUARE CAM

The five most common computing cams are: square, flat ballistic, reciprocal, secant, and barrel ballistic. The barrel ballistic cam is described in the chapter on ballistic computers, page 342. Since the construction of the reciprocal and secant cams is similar, their repair procedure is identical. This chapter gives the repair procedures for square, flat ballistic, and reciprocal cams.

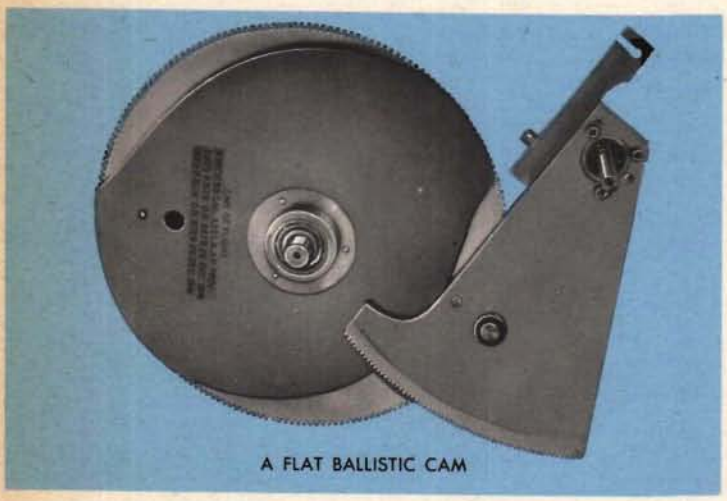
A FLAT BALLISTIC CAM

A square, flat ballistic, or reciprocal cam is usually mounted as part of another unit. Before the cam can be disassembled for repair, it is often necessary to remove the other unit from the instrument before separating the cam assembly from it.

The reciprocal cam is sometimes mounted as an independent unit with its own input and output gearing. It can be removed from the instrument by taking out the screws which hold its three posts to the instrument.

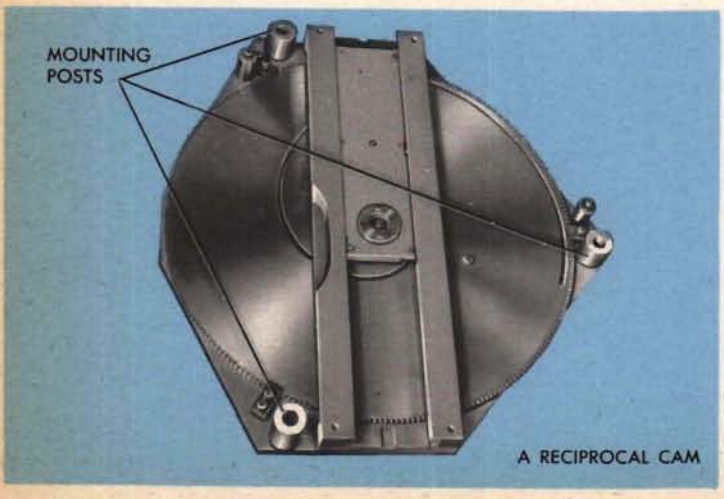

A RECIPROCAL CAM

Minor repairs can sometimes be made without removing the unit from the instrument. If the unit must be removed for repair, consult the instrument OP for instructions.

Typical symptoms

If a test analysis and unit check tests indicate that the unit is not operating properly, look for one of the following typical symptoms:

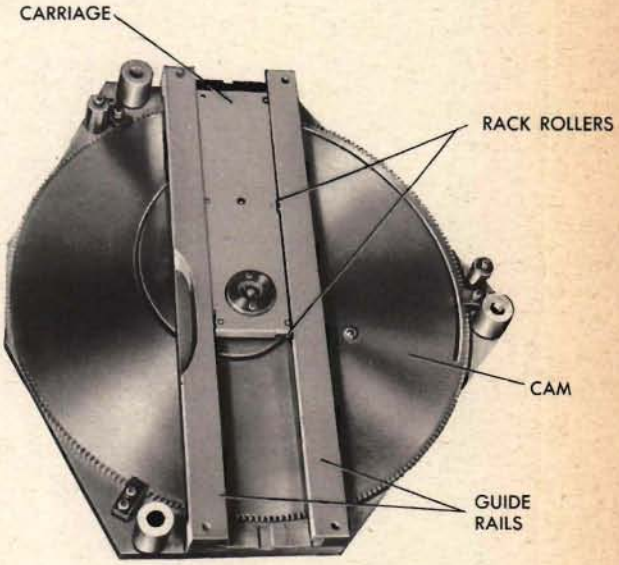

JAMMING: The cam cannot be turned by hand.

STICKING: The cam resists turning past a certain point or points, or turns sluggishly.

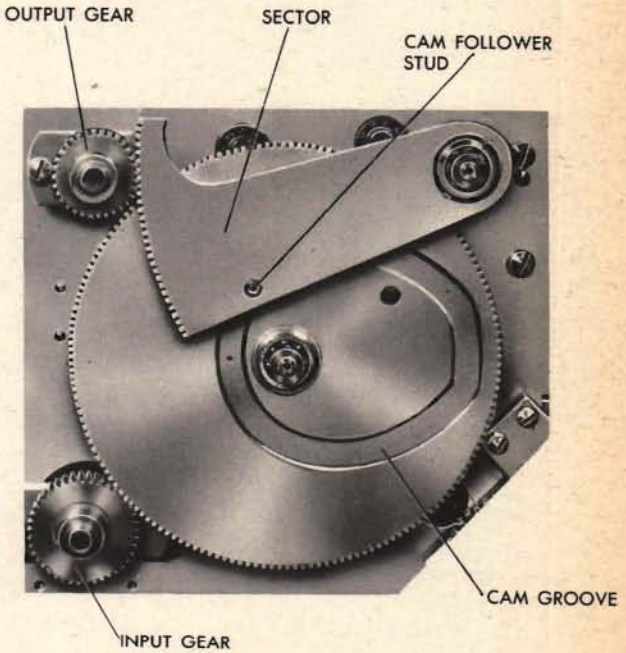

EXCESSIVE LOST MOTION: There is too much play between a cam groove and follower, the input and output gear, or rack rollers and guide rails.

SLIPPING: Moving the input gear does not move the output gear; or turning the cam does not position the sector or the carriage.

Locating the cause

Jamming or sticking

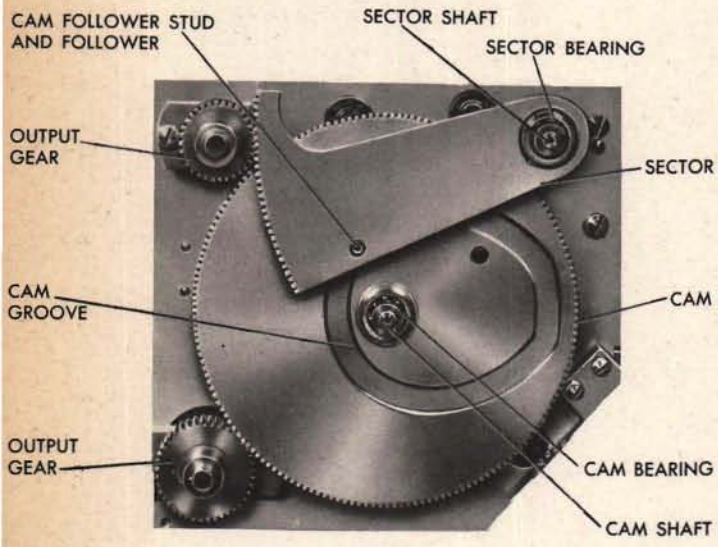

A computing cam may jam or stick because of a dirty or damaged cam edge or groove, follower, or follower stud; or because of dirty or damaged carriage gear teeth, cam or sector gear teeth, bearings, or guide rails.

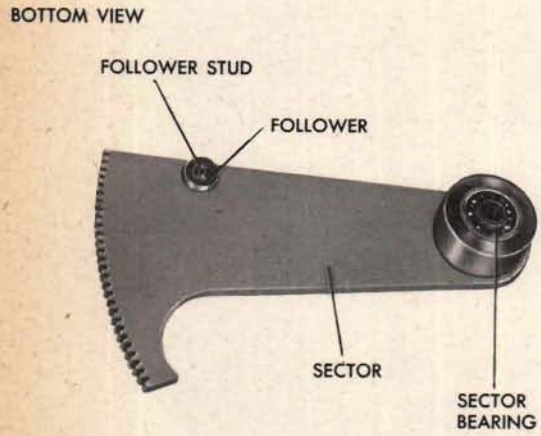

If a square cam jams or sticks, look for a dirty or burred cam follower, a bent cam follower stud, or a dirty or damaged cam groove. Examine the input and output gears and the cam and sector gear teeth for dirt or damage. Also inspect the bearings on which the cam and the sector are mounted. Dirty bearings should be cleaned and damaged ones replaced.

Bent cam or sector shafts may also cause jamming or sticking. The unit must be disassembled in order to remove and straighten these shafts.

If a flat ballistic cam jams or sticks, the edge of the cam follower may be dirty or damaged. A badly damaged cam must be replaced. Look also for dirty or damaged cam or sector bearings, damaged gear teeth, a damaged follower, or a bent follower stud, cam shaft, or sector shaft.

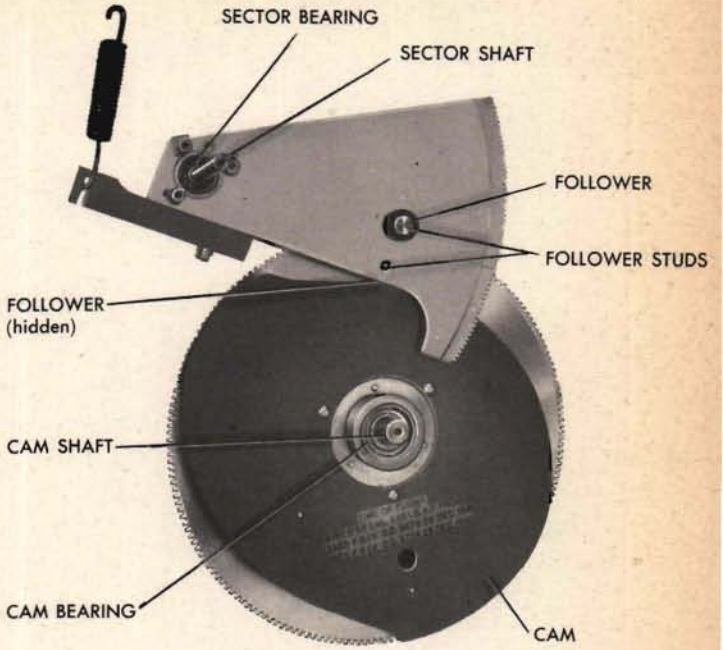

If a reciprocal cam jams or sticks, the cam or follower bearing, the follower, or the cam or carriage gear teeth may be dirty or damaged.

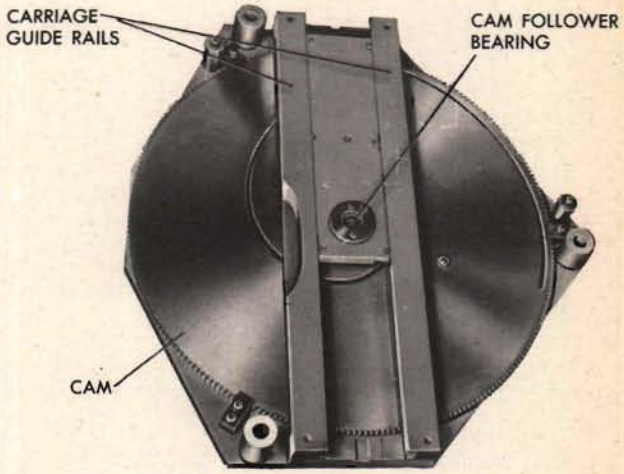

Examine the six carriage rollers and the carriage guide rails for burred surfaces or dirt. The carriage and rails must be removed from the unit for repair. The unit must be removed in order to inspect the cam follower bearing for dirt or damage.

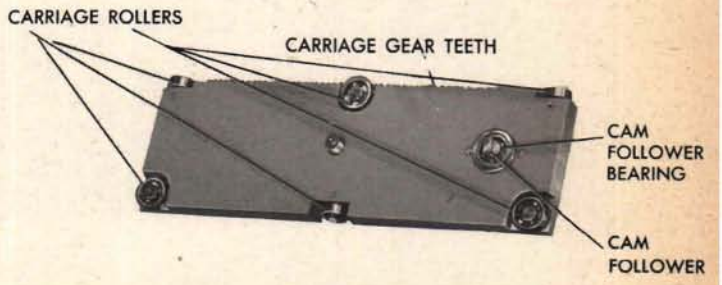

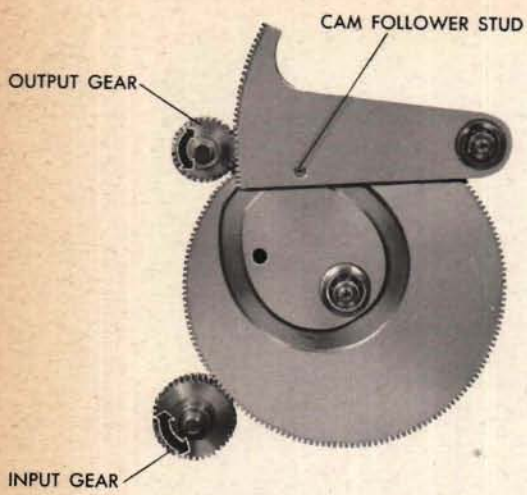

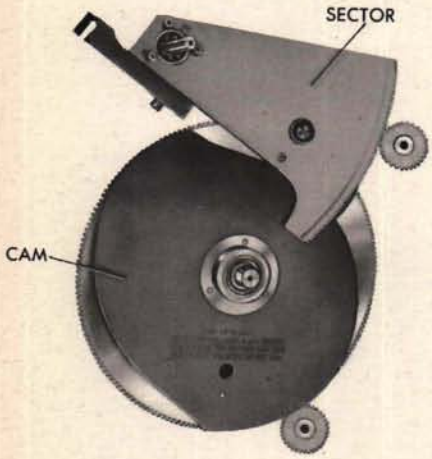

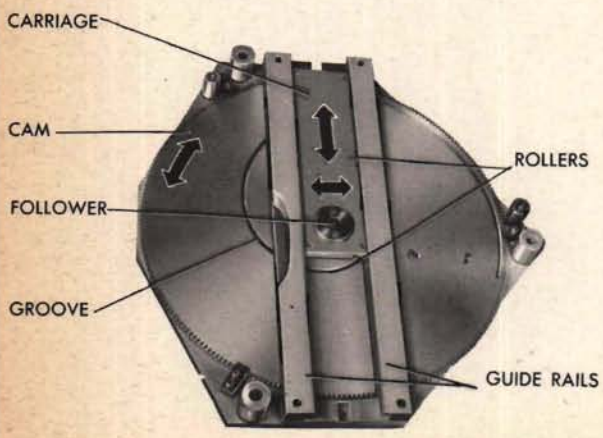

Excessive lost motion

Excessive lost motion between the input and output gears or between the cam and the sector or carriage may be caused by a loose or worn follower or by damaged gear teeth. On a reciprocal cam, worn or improperly adjusted carriage rollers or worn guide-rail grooves may cause excessive lost motion between the carriage and the guide rails.

On a square cam, if there is too great a lag between the turning of the input and output gears, inspect all gear teeth and the cam follower for wear. Look also for looseness of the follower on the stud.

On a flat ballistic cam, too great a lag between the turning of the cam input gear and the moving of the sector output gear may be caused by worn gear teeth.

On a reciprocal cam, too great a lag between the turning of the cam input gear and the moving of the carriage is probably caused by worn gear teeth, a worn follower or groove, or excessive lost motion between the carriage and the guide rails. Excessive lost motion between the carriage and the guide rails may be caused by worn or loose carriage rollers or by worn guide rails. It is easier to inspect or repair the carriage gear teeth when the carriage is disassembled.

Slipping

On a square cam, slipping between the input and output gears or between the cam and the sector may be caused by a sheared or missing follower stud.

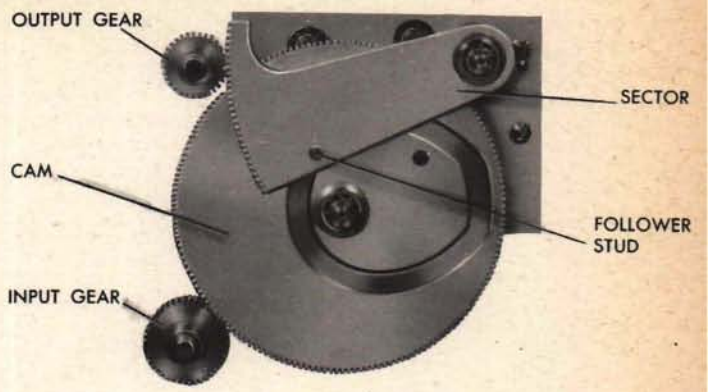

On a flat ballistic cam, if the sector does not move when the cam is turned, the cause may be either a sheared or missing follower stud or a weak or broken sector spring.

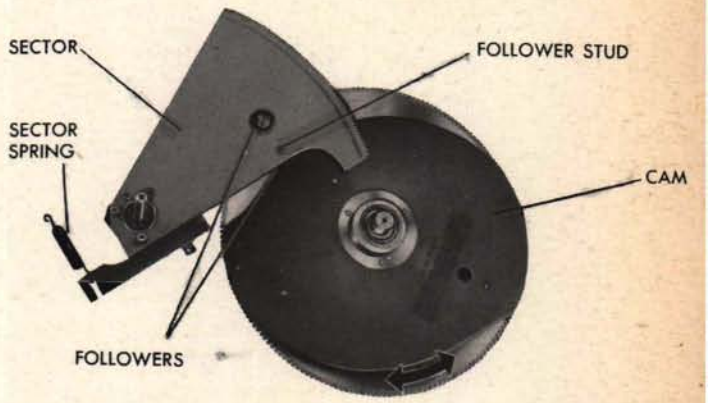

On a reciprocal cam, if the carriage does not move when the cam is turned, the cause is probably a sheared or missing follower.

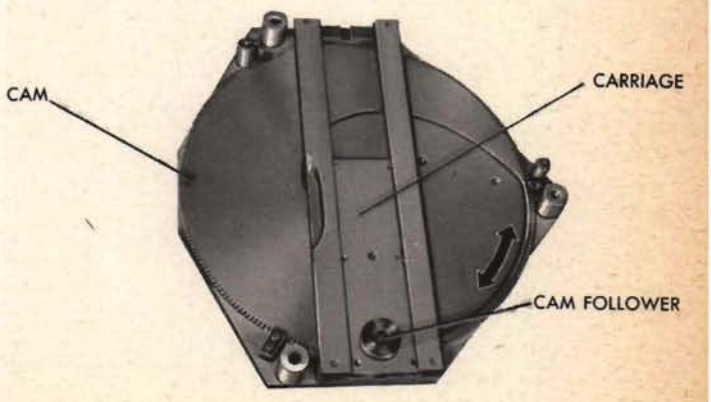

Disassembling the units

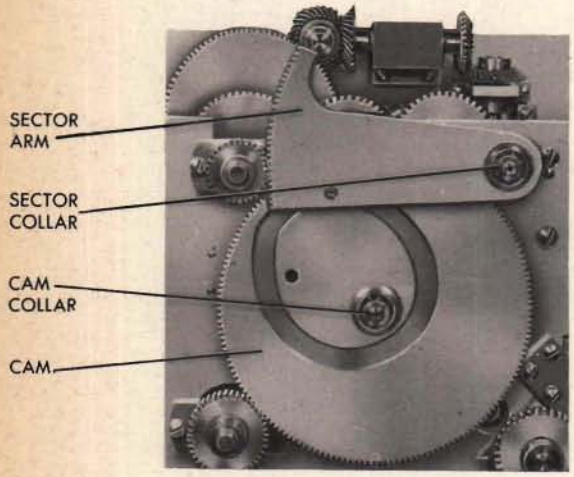

The square cam is part of a larger unit. To disassemble the square cam, drive the taper pins out of the collars and pull the collars, the sector arm, and cam off their shafts.

The flat ballistic cam is also part of a larger unit. To disassemble the cam and sector, consult the instrument OP for instruction.

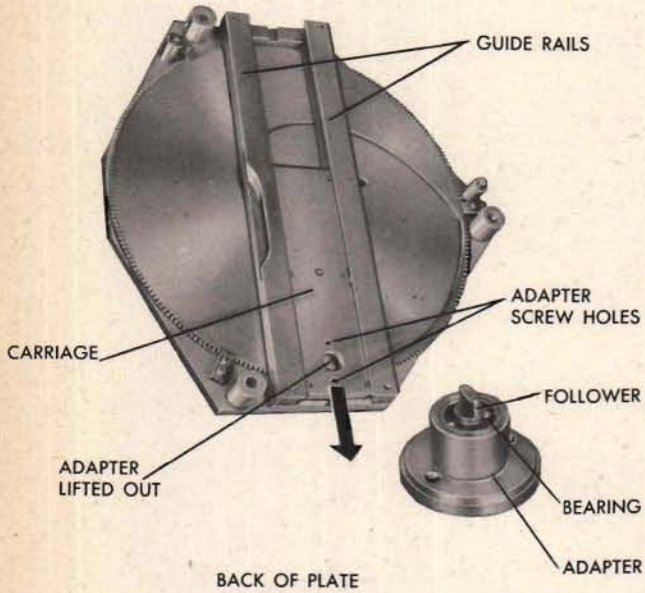

The reciprocal cam is disassembled as follows:

1 Remove the two adapter screws and lift out the adapter.

2 Slide the carriage out at one end of the rails.

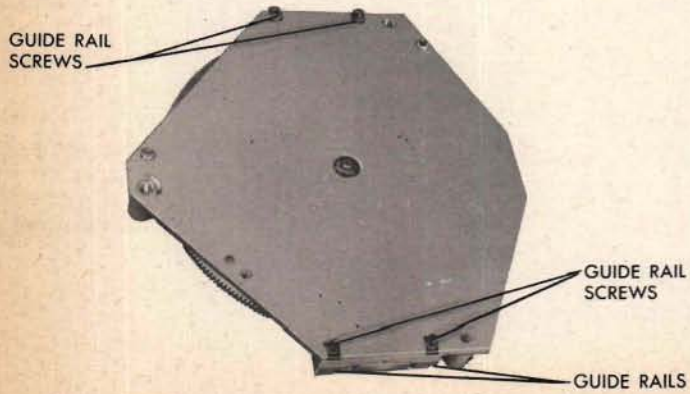

3 From the back of the plate, remove the four screws holding the guide rails.

4 Lift off the guide rails.

5 Remove the three cam guides.

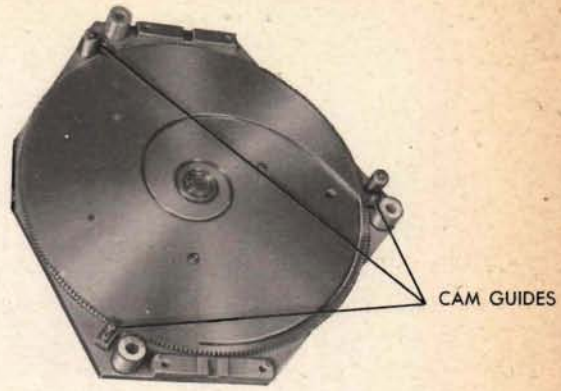

6 Remove the screw in the cam stud from the back of the plate. Tag the washer.

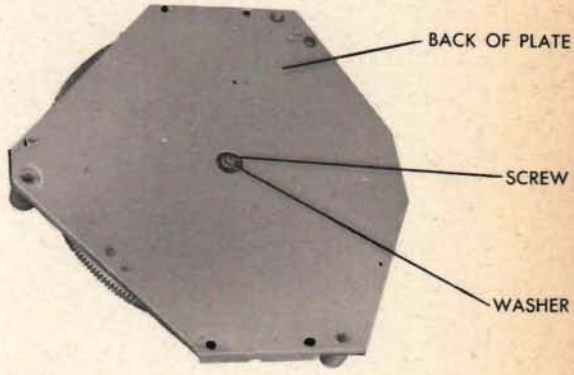

7 Remove the cam stud and spacer. Tag the spacer.

8 Lift the cam off the plate.

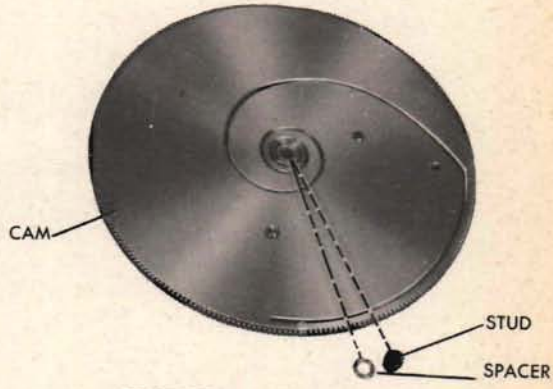

9 Remove the snap ring and carefully drive the follower shaft out of the two bearings. Tag the spacer.

10 Push the bearings out of the adapter.

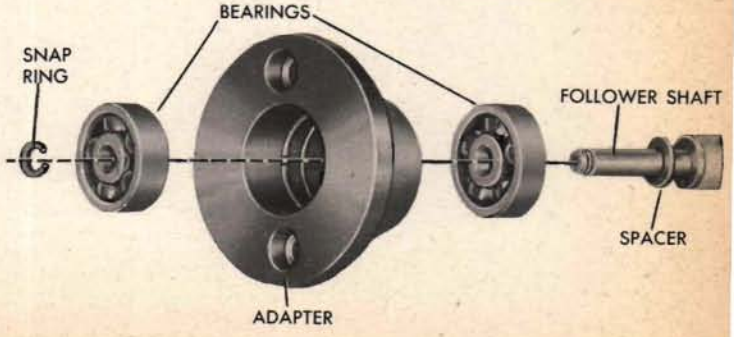

Repairing the parts

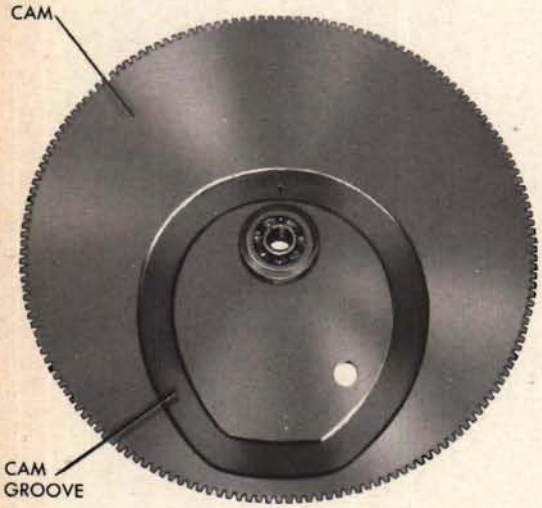

Repairing a cam

A cam groove that is only slightly damaged may be repaired by burnishing the surfaces. See page 238. If a cam groove is badly damaged, the cam must be replaced. Burnishing a badly burred groove will enlarge the groove and cause excessive lost motion.

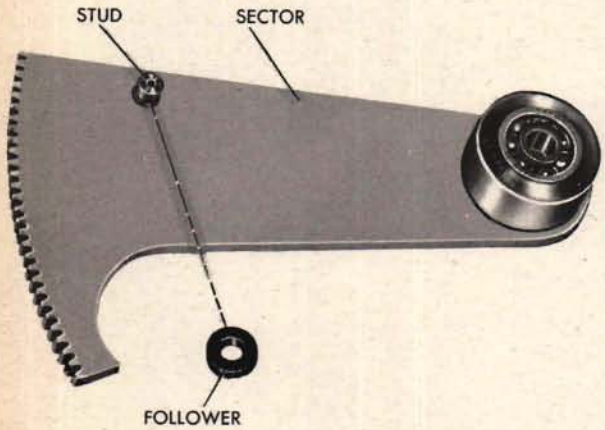

Repairing a follower

On a flat ballistic or square cam, if a follower binds on its stud, disassemble the follower and polish the stud. Keep trying the follower on the stud until it turns freely but without excessive lost motion. Then lubricate the stud and mount the follower.

A slightly bent follower stud can be straightened, but a badly bent one must be replaced.

A burred follower should be polished very carefully because any reduction in diameter will cause excessive lost motion between the follower and groove.

Replacing a flat ballistic cam or gear

If the edge of a flat ballistic cam or the teeth of the large gear are damaged, the part must be replaced. Fasten the adapter to the large gear with three screws in the back of the gear.

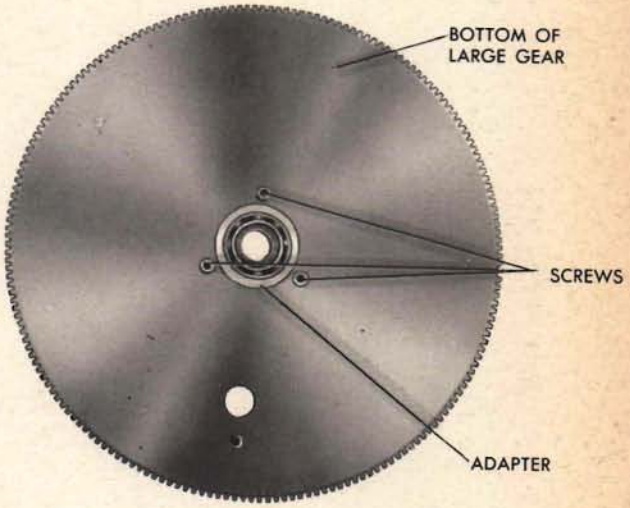

Place the flat cam on the adapter after polishing both surfaces, if necessary, to make a close fit. Insert a short length of rod through the holes of the cam and gear. Dowel the flat cam to the gear and then rivet them together with three aluminum rivets. Clean and lubricate the two large bearings before remounting them in the adapter. Consult the assembly drawing before replacing a cam or gear.

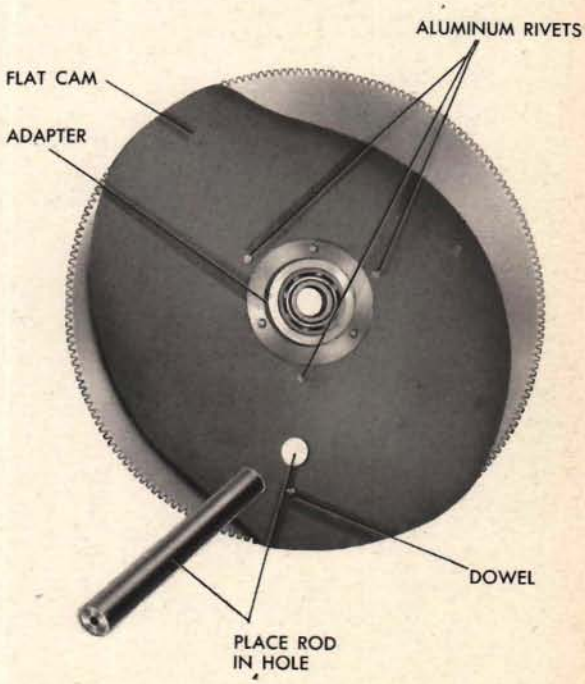

Repairing gear teeth

Slightly burred gear teeth can be repaired by stoning off the burrs. If the teeth on a gear, cam, sector, or carriage are badly damaged, however, the part should be replaced.

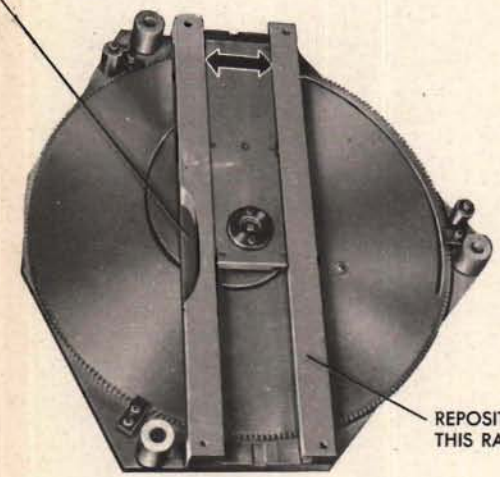

Eliminating carriage side play

In a reciprocal cam, if there is too much play between a carriage and its guide rails, it is usually advisable to eliminate the play by repositioning the guide rail which has no cut-away section. Moving the rail with the cut-away section might disturb the mesh between the carriage-rack gear teeth and the output gear.

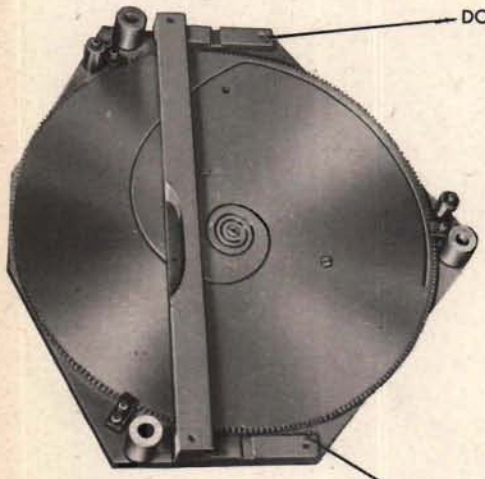

Remove the carriage and rail to be repositioned. Drive the dowels out of the plate. Mount the carriage and rail so that the carriage can be moved freely throughout its travel without excessive lost motion. Be sure that the rails are exactly parallel. Tighten the screws and redowel with oversize dowels. See *Basic Repair Operations*, page 74.

If the carriage rollers have eccentric studs, however, excessive lost motion can be eliminated by adjusting the studs. Carefully adjust the studs by turning them a little at a time. Keep turning the studs until the carriage moves freely with a minimum of lost motion throughout its travel.

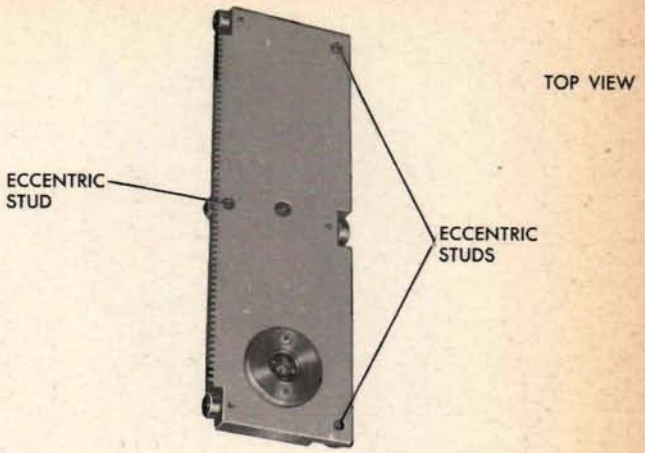

When adjusting the stud of the single roller on the rack side of the carriage, be careful not to spoil the rack teeth mesh. When adjusting the two studs on the opposite side of the carriage, be careful not to cock the carriage between the rails.

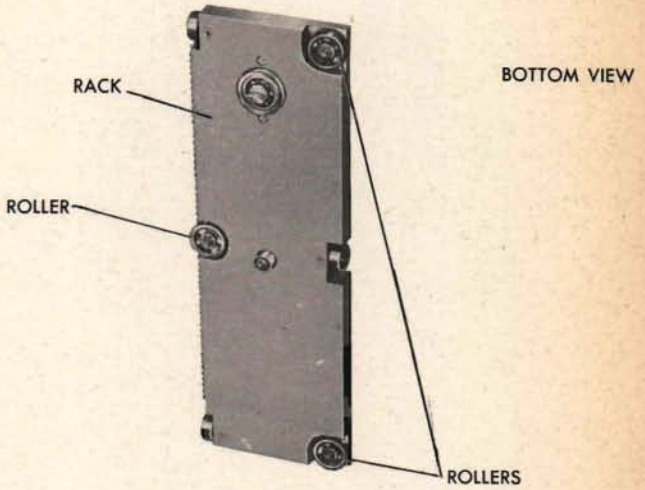

To check the position of the carriage, mount a dial indicator against the rack teeth and move the carriage through the full length of its travel. For allowable error, consult the assembly drawing. When the carriage has been positioned satisfactorily, remove it and stake the studs.

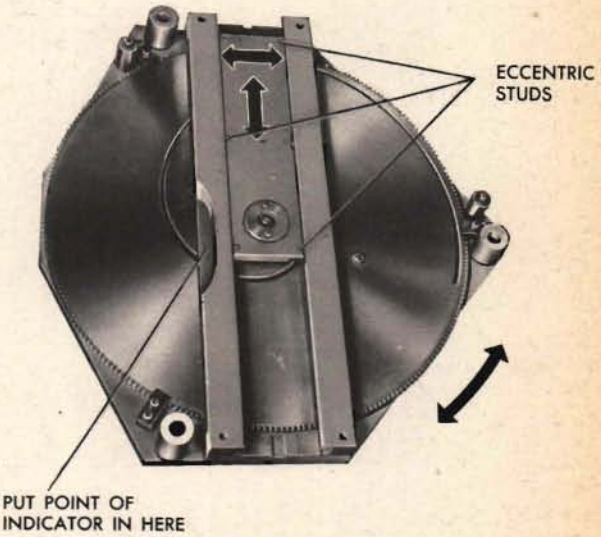

Reassembling the units

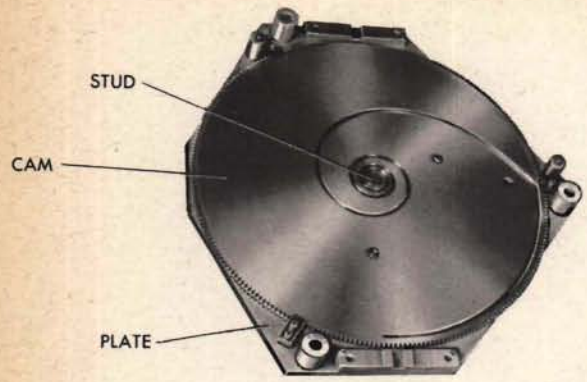

To reassemble the *square cam,* mount the cam and the sector on their shafts, pin the collars, and stake the pins.

To reassemble the *flat ballistic cam,* consult the instrument OP.

To reassemble the *reciprocal cam,* follow this procedure:

1 Mount the cam on the plate with the spacer between them. Insert the stud.

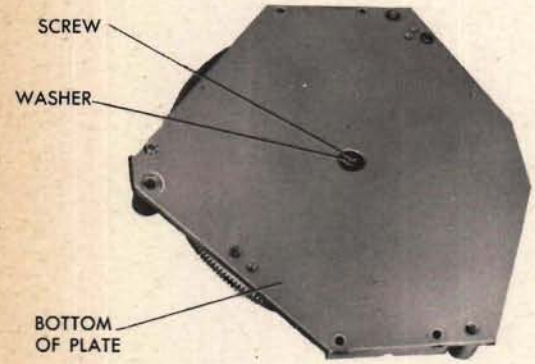

2 Hold the washer in position over the stud on the bottom of the plate and fasten the screw.

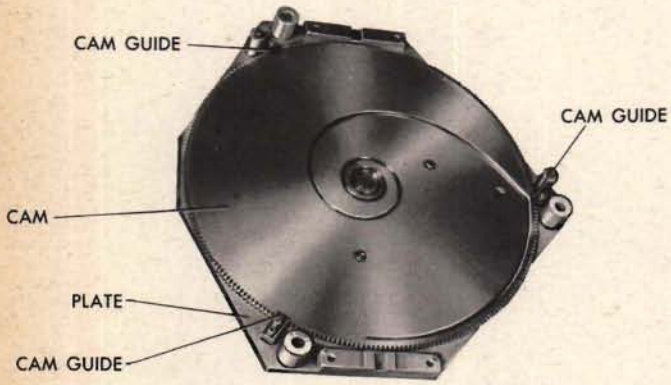

3 Mount the three cam guides and fasten the screws.

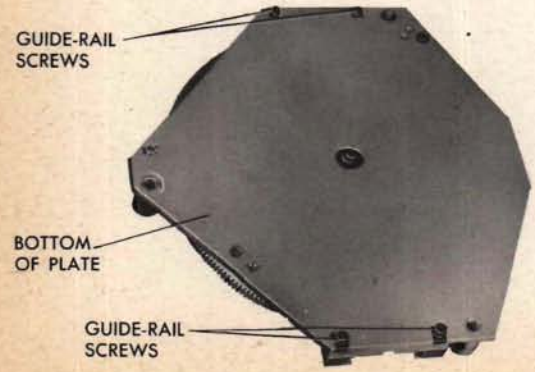

4 Mount both rails and fasten the four guide-rail screws from the bottom of the plate.

5 Slide the carriage in position from one end of the rails. Be sure the rails and carriage are in the positions shown in the assembly drawings.

6 Seat the bearings in the adapter.

7 Put the spacer on the shaft and push the shaft through the bearings. Fasten the snap ring.

8 Mount the adapter in the carriage, sliding the follower into the groove at the same time. Fasten the two screws.

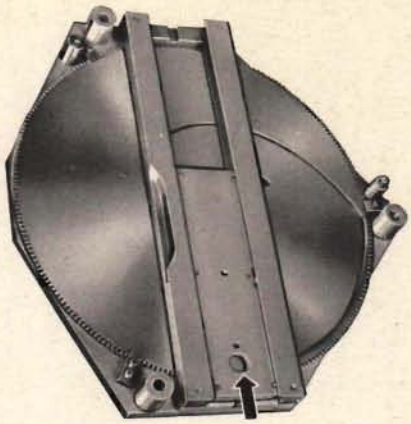

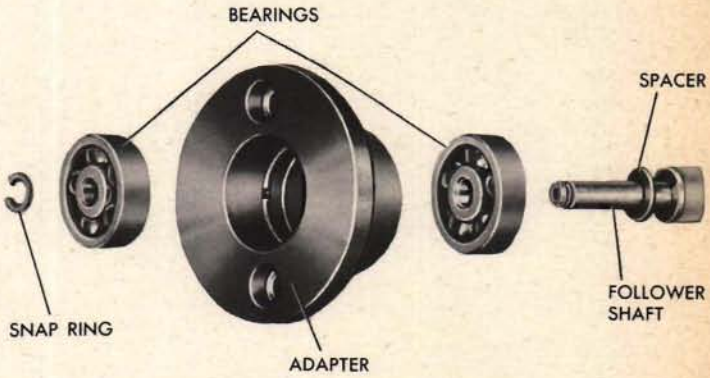

Bench checking the unit

1 Check the unit assembly against the assembly drawing.

2 All gear teeth and bearings and the follower and groove must be properly lubricated.

3 The cam should turn freely through its required limits of travel. Consult the assembly drawing for information about the travel limits.

4 The follower must move easily and there must be a minimum of lost motion between the follower and the cam groove.

5 The carriage on the reciprocal cam must move freely and with minimum side play between the carriage and rails.

6 All gear meshes should be free and have a minimum of lost motion.